DLV 68660 TOS SM

Urban Colors Edition. Vertical decorative hood with FreshAir function

LED | Perimeter extraction | Stop Delay Timer | Fresh AIR

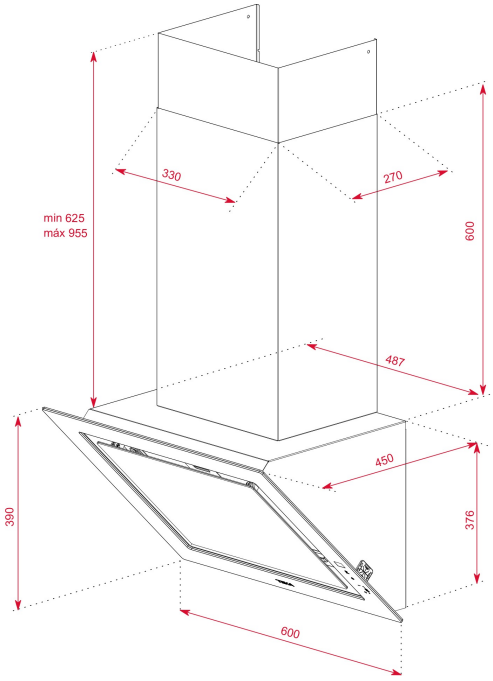

REFERENCE

REF: 112930027 EAN: 8434778011913

FEATURES

Urban Colors Edition
Decorative vertical hood
Touch control with display
FreshAir function
3 speeds + 1 intensive
Intensive speed exhaust capacity (dBA): 725
Max speed exhaust capacity (m3/h): 410
Min speed exhaust capacity (m3/h): 232
Intensive speed sound level (dBA):70,9
Max speed sound level (dBA): 64,6
Min speed sound level (dBA): 49,4
1 LED lamp
1 Aluminum filter
Stop delay timer
Filer saturation indicator
Anti-return valve included
Outlet reduction included
Optional recirculation kit with tube cover installation: CFH 15200 L3C
Optional regenerative recirculation kit with tube cover installation: RFH 15200 L3C
Optional recirculation kit without tube cover installation:CFH 15200 O2C
Optional Charcoal Filter: C1RTK
Optional Regenerative filter: R1RTK

DIMENSIONS

Product height (mm): 1001-1331
Product width (mm): 600
Product depth (mm): 450
Product length (mm):
Net weight (Kg): 12,8

TECHNICAL DETAILS

Energy Efficiency Class: A+
Noise (LwA) Min Speed (dB): 49
Noise (LwA) Max Speed (dB): 65
Noise (LwA) Boost Speed (dB): 71
Ø Outlet (mm): 150

COLOURS

112930027	Steam grey
112930025	Stone grey
112930025	Black
112930025	London brick brown

	112930025	White