MTP 978
Kitchen tap mixer with pullout shower

REFERENCE

REF: 46978020CN EAN: 8421152134610

FEATURES

Low spout pull-out kitchen tap
Swivel spout
Anti-scale aerator
Pull-out 2 functions: normal & shower spray
Extra resistant flexible hose
40 mm cartridge
Cartridge with ceramic discs of high resistance
Highly precise temperature control
Greater handling sensitivity with smoother movements
3/8" flexible inlet pipes

Anti-scale aerator | Pull Out Shower | Resistance | Swivel spout

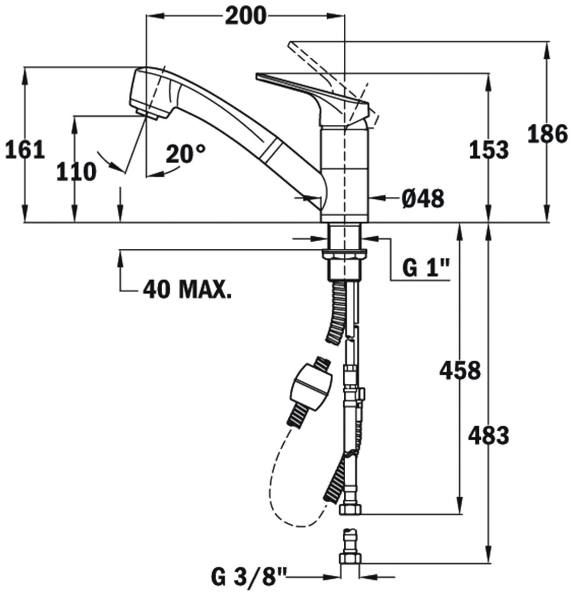

DIMENSIONS

Product height (mm): 161
Product width (mm):
Product depth (mm):
Product length (mm):
Net weight (Kg): 2,12

COLOURS

46978020CN	Carbon
46978020Q	Chrome
46978020Q	Topasbeige
46978020Q	Sandbeige
46978020Q	Metallic black