SP 995
Kitchen tap mixer with high swivel spout

Anti-scale aerator

Swivel spout

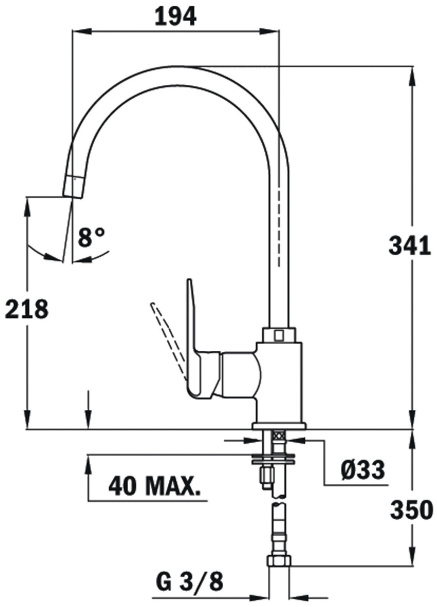

REFERENCE

REF: 55995020S EAN: 8421152102220

FEATURES

High spout kitchen tap
Swivel spout
Anti-scale aerator
Cartridge with ceramic discs of high resistance
Highly precise temperature control
Greater handling sensitivity with smoother movements
3/8" flexible inlet pipes

DIMENSIONS

Product height (mm):
Product width (mm):
Product depth (mm):
Product length (mm):
Net weight (Kg): 1,55

COLOURS

55995020S	Sandbeige
559950200	Topasbeige
559950200	Metallic black
559950200	Carbon
559950200	Stainless steel
559950200	Chrome