# FOT 995

Single lever kitchen tap with aerator integrated in the spout

## REFERENCE

REF: 116030035 EAN: 8434778009262

## FEATURES

Metallic Edition, Titanium Collection
High spout kitchen tap
Swivel spout
Anti-scale aerator
Cartridge with ceramic discs of high resistance
Highly precise temperature control
Greater handling sensitivity with smoother movements
Easy-Quick fixation system
3/8" - 1/2" flexible inlet pipes

Fingerprint-Proof | Saving Water | Anti-scale aerator | Swivel spout | Easy installation

PVD

## DIMENSIONS

**Product height (mm):** 420
**Product width (mm):**
**Product depth (mm):**
**Product length (mm):**
**Net weight (Kg):** 0,95

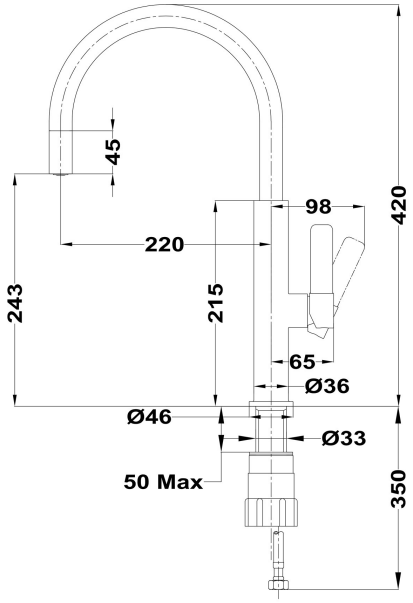


## COLOURS

| | |
|---|---|
| 116030035 | Chrome titanium |
| 116030047 | Stone grey |
| 116030047 | Chrome brass |
| 116030047 | Black chrome |
| 116030047 | Chrome white |
| 116030047 | Chrome |
| 116030047 | London brick brown |
| 116030047 | Steam grey |