RLF 74920 SS EU 179cm Full No Frost Side by Side Refrigerator with 2 doors and ECO function

On Holidays function | Fresh Box | LED | LongLife No Frost

DESCRIPTION	179cm Full No Frost Side by Side Refrigerator with 2 doors and ECO function
LIFE STYLE	Maestro
COLOURS	
REFERENCE	REF. 113430011 EAN. 8434778003901

RLF 74920 SS EU

FEATURES

Free Standing side by side refrigerator
Full No Frost
Outer control display
Electronic adjustable thermostat
2 FreshBox drawers
Safety glass shelves
Automatic ice maker and Automatic water dispenser
On holidays function
Fast freezing and fast cooling function
Front adjustable feet
Glass shelveses in freezer
LED Illumination
Climate class: T
Total capacity (gross/net): 573 / 490 litres
2 Ice cube trays and twister ice maker included

RLF 74920 SS EU

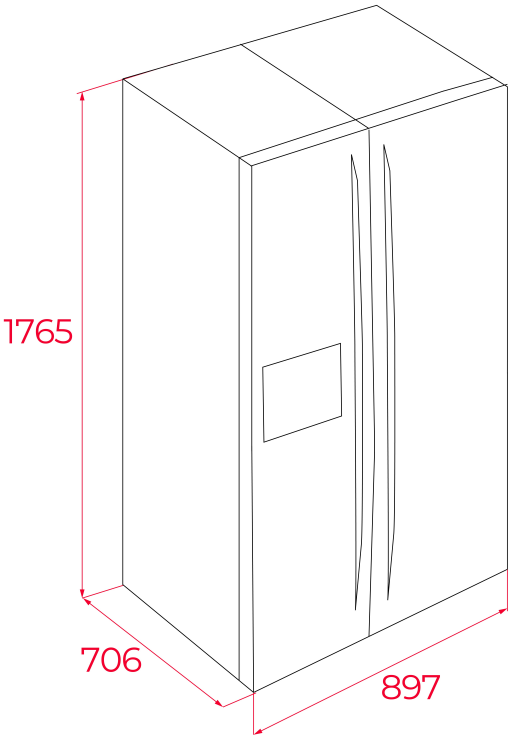

DIMENSIONS

Product height (mm): 1788
Product width (mm): 895
Product depth (mm): 774
Product length (mm):
Net weight (Kg): 108

TECHNICAL DETAILS

PRODUCT SHEET

Cooling system: LongLife No Frost
No Frost In Refrigerator Compartment: Yes
No Frost in chiller: Yes
No Frost in freezer compartment: Yes
Total gross capacity (litres): 573
Refrigerator compartment capacity (litres): 334
Freezer compartment capacity (litres): 156
Freezer classification: 4
Freezing capacity: 14
Annual Consumption (kWh/year): 317
Temperature Rise Time (h): 7
Climate class: T
Noise level (dB): 41
Certificates: CE, TUV, GS

POWER SUPPLY

Frequency (Hz): 50
Power rate (V): 220-240
Power rate (W): 188
Defrost element power (W): 240
Energy consumption (kw/day): 0,882

Cable Connection Length (cm): 1750

FEATURES

Type of installation: Free standing
Automatic defrosting in the refrigeration compartment: Yes
Automatic defrosting in the freezer compartment: Yes
Electronic adjustable thermostat: Yes
Display on door: Yes
Fingerprint proof door: Yes
Antibacterial treatment: NO
Freezing set button: Yes
Cooling set button: Yes
Lock function: Yes
Fast freezing: Yes
Fast Cooling Function: Yes
On Holidays Function: Yes
Inner light: Yes
Type of inner light: LED
External handle: Yes

CONTROL INDICATOR LIGHTS

Operating light fridge: Yes
Operating light freezer: Yes
Freezer compartment temperature display: Yes
Fast freezing indicator: Yes
Acoustic alarm: Yes

EQUIPMENT

Multipurpose compartment: NO
Automatic water dispenser: Yes
Automatic ice maker: Yes
Ice off: Yes
Ice cubes tray: 2
Bottle rack type: NO
Adjustable Feet Back: Yes
Adjustable feet front: Yes
Refrigerator adjustable shelves: Yes
Vegetable drawers: 2

RLF 74920 SS EU
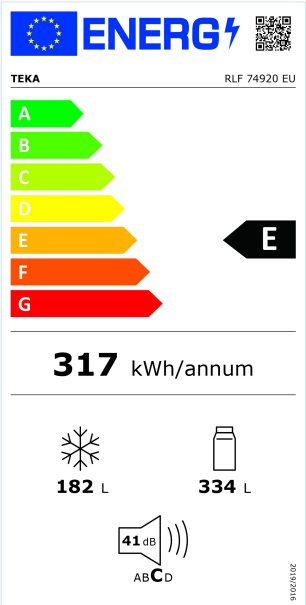
ENERGY LABEL