TK5 1480 EXP Free standing Washing Machine with 15 programs and 8kg washing capacity

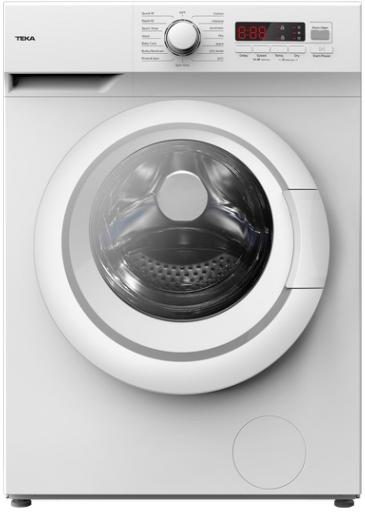

Quick Cycle

DESCRIPTION	Free standing Washing Machine with 15 programs and 8kg washing capacity
LIFE STYLE	Total
COLOURS	
REFERENCE	REF. 113910007 EAN. 8434778017885

TK5 1480 EXP

FEATURES

Free standing Washing Machine
Electronic control panel with display
Washing capacity: 8 kg
15 washing programs
Fast program: 15 minutes
Special programs: ECO mode, Wool care, Delicate, Sport
Special functions: Delay timer, Speed wash, Extra rinse
SmartWash system
Maximum spinning speed: 1400 RPM
Automatic water regulation
Automatic door lock safety system
Child lock
SoftCare drum
Delay timer: 1-24 hours
32 cm wide porthole door

TK5 1480 EXP

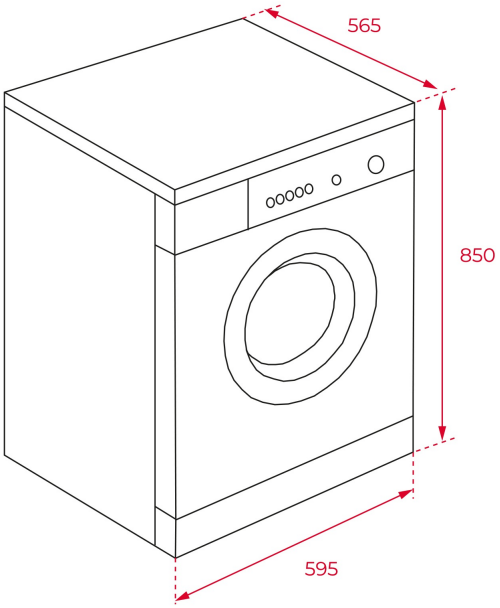

DIMENSIONS

Product height (mm): 850
Product width (mm): 595
Product depth (mm): 565
Product length (mm):
Net weight (Kg): 68

TECHNICAL DETAILS

PRODUCT SHEET	**Type of installation:** Free standing **Energy consumption (kWh/year):** 196 **Water consumption (litres/year):** 11000
POWER SUPPLY	**Frequency (Hz):** 50 **Power rate (V):** 220-240 **Plug type:** UK **Maximum Nominal Power (W):** 2000
FEATURES	**Stainless Steel Drum:** Yes **Glass door diameter (cms):** 32 **Number of programs:** 15 **Number Of Washing Temperatures:** YES **Control panel:** ELECTRONIC **Electronic washing management:** Yes **Child lock:** Yes **Auto lock door:** Yes **Cancel spin cycle button:** Yes

CONTROL INDICATOR LIGHTS	**Selected program indicator:** Yes **Remaining time:** Yes
SPECIAL FUNCTIONS	**Fast program:** Yes **Fast program (minutes):** 15 **Economic program:** Yes **Intense program:** Yes **Delicate fabrics:** Yes
EQUIPMENT	**Adjustable Feet Back:** Yes **Adjustable feet front:** Yes