IZS 97630 MST 91 cm induction Flex hob with SlideCooking function and 5 cooking zones

MultiSlider

Autolock

Power

Power Plus

Easy installation

Super Zone

DESCRIPTION	91 cm induction Flex hob with SlideCooking function and 5 cooking zones
LIFE STYLE	Total
COLOURS	
REFERENCE	REF. 112500034 EAN. 8434778012057

IZS 97630 MST

FEATURES

Urban Colors Edition
MasterSense Series
Flex Induction hob
SlideCooking function
Direct functions with temperature sensors: Confit, poaching, grilling, pan frying, deep frying, quick boiling, simmering, melting and keep warm
Touch Control MultiSlider
5 cooking zones
1 zone Ø 320/180 mm
2 zones Ø 228 x 200 mm
1 zone Ø 215 mm
1 zone Ø 150 mm
Ceramic glass surface
Auto-lock safety system
Cooking timer
Power plus
Child lock
Residual heat indicator
Power management
Easy installation kit
Maximum nominal power 10.800 W
Optional: Grilling plate
Optional: Teppanyaki

IZS 97630 MST

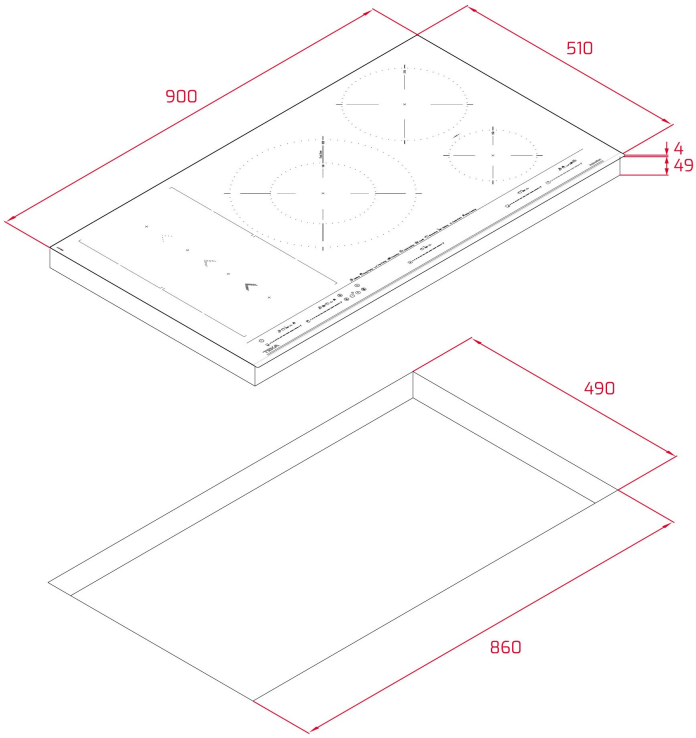

DIMENSIONS

Product height (mm): 53
Product width (mm): 900
Product depth (mm): 510
Product length (mm):
Net weight (Kg): 15,18

TECHNICAL DETAILS

FITTING MEASURES	**Built-in Width (mm):** 860 **Built-in Depth (mm):** 490 **Built-in height (mm):** 49
FEATURES	**Number of electric power levels:** 9 **Grilling:** Yes **Pan frying:** Yes **Deep frying:** Yes **Simmering:** Yes **Melting:** Yes **Keeping warm:** Yes **Confit:** Yes **Poach:** Yes **Power management function:** Yes
ELECTRIC CONNECTION	**Maximum Nominal Power (W):** TBC **Frequency (Hz):** 50/60 **Power rate (V):** 220-240 **Cable Connection Length (cm):** 110

Maximum Nominal Power (W) (Electric hob): 10800

COOKING ZONES

Cooking Zones: 5
Energy consumption for the whole hob, Wh/Kg: tbc

SAFETY SYSTEMS

Residual heat indicator (Electric hob): Yes
Automatic safety disconnection (Auto Lock) (Electric hob): Yes
Child lock: Yes

FINISH

Surface type: Ceramic Glass (4mm)
Easy installation system: Yes

ACCESSORIES

Junction Kit: Optional
Teppan Yaki: Optional