EWH 80 H VR01 Water heater with double installation system and 80L capacity

Dry Heating Protection | ELCB Earth Leakage Circuit Breaker | Humidity Control | Overheating Protection | Type of Installation

DESCRIPTION	Water heater with double installation system and 80L capacity
LIFE STYLE	Total
COLOURS	
REFERENCE	REF. 42080280 EAN. 8421152131961

EWH 80 H VR01

FEATURES

Vertical and horizontal installation
Capacity: 73 litres
Average number of users: 2-4
Tank ultra-resistant protective polish
Enamelled heating element
Temperature regulation 30º - 75º C
Max input pressure: 0.75 Mpa
Thermometer
Over-pressure protection
Over-heating protection
Humidity protection
Dry-heating protection
Earth leakage circuit breaker ELCB
Power rate: 1500 W
Isolation thickness: 20 mm

EWH 80 H VR01

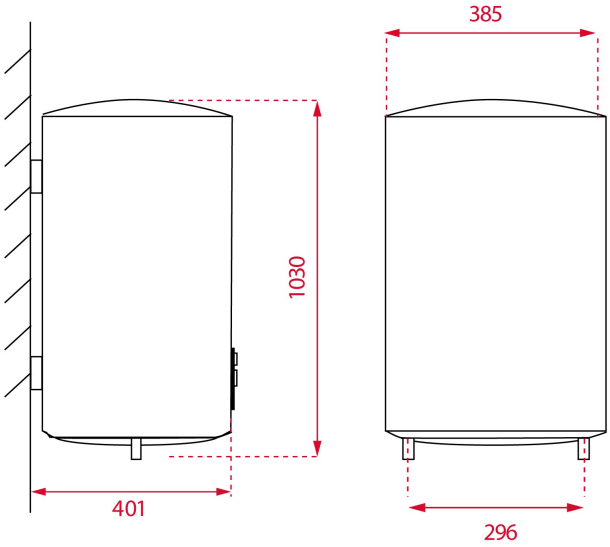

DIMENSIONS

Product height (mm): 1030
Product width (mm): 385
Product depth (mm): 385
Product length (mm):
Net weight (Kg): 26,31

TECHNICAL DETAILS

FEATURES

Power rate (V): 220-240
Frequency (Hz): 50
Power rate (W): 1500
Plug type: EU
Type of installation: Vertical,Horizontal
Certificates: CE;CB
Average number of users: 2-4
Control panel: MECHANICAL
Number of power levels: 1
Maximum input pressure (Mpa): 0,75
Sapphire Enamelled Steel Tank: Yes
Magnesium protection anode: Yes
Heating element indicator lamp: Yes
Thermometer: Yes
Insulation thickness (mm): 20
Degree of protection against humidity: IPX4
Protection against heating: Yes
Dry heating protection: Yes

EU REGULATION NO. 812/2013

Declared load profile: M
Water heating energy efficiency class: C
Annual energy consumption AEC kWh/annum (kWh): 1422,00
Sound power level L WA (dB): 15

Storage Volume V L (L): 72

EWH 80 H VR01
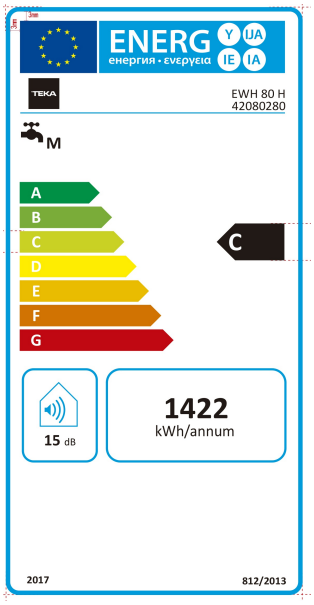
ENERGY LABEL