LI5 1080 EU Built-In Washing Machine with 15 washing programs

Quick Cycle

Washing capacity: 8Kg

DESCRIPTION	Built-In Washing Machine with 15 washing programs
LIFE STYLE	Total
COLOURS	
REFERENCE	REF. 40830050 EAN. 8421152150429

LI5 1080 EU

FEATURES

Built-in Washing Machine
Electronic control panel
Washing capacity: 8 kg
15 washing programs
Fast program: 14 minutes
Special programs: ECO mode, Delicate
Delay timer function
SmartWash system
Maximum spinning speed: 1000 RPM
Automatic water regulation
Automatic door lock safety system
Child lock
SoftCare drum
Delay timer: 1-24 hours
30 cm wide porthole door

LI5 1080 EU

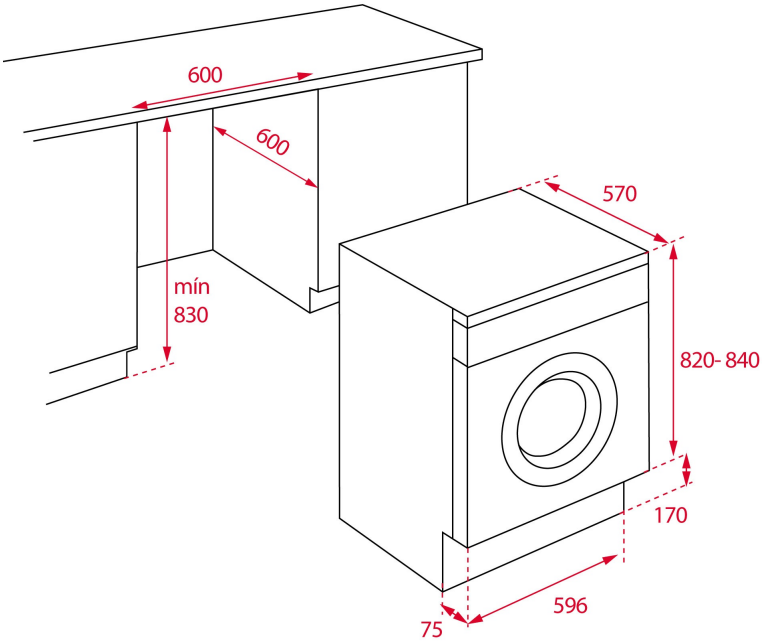

DIMENSIONS

Product height (mm): 820
Product width (mm): 596
Product depth (mm): 570
Product length (mm):
Net weight (Kg): 68

TECHNICAL DETAILS

PRODUCT SHEET	**Type of installation:** Built-in **Energy consumption (kWh/year):** 196 **Water consumption (litres/year):** 9850
POWER SUPPLY	**Frequency (Hz):** 50 **Power rate (V):** 220-240 **Maximum Nominal Power (W):** 1600 **Nominal power motor (W):** 350 **Power of heating element (W):** 1600
FEATURES	**Stainless Steel Drum:** Yes **Number of programs:** 15 **Number Of Washing Temperatures:** 0-20-30-40-60-90 **Control panel:** ELECTRONIC **Electronic washing management:** Yes **Child lock:** Yes **Auto lock door:** Yes **Cancel spin cycle button:** Yes
CONTROL INDICATOR LIGHTS	**Selected program indicator:** Yes

Remaining time: Yes

SPECIAL FUNCTIONS

Fast program: Yes
Fast program (minutes): 14
Economic program: Yes
Intense program: Yes
Delayed Timer (h): 0-24
Delicate fabrics: Yes
Resistant: Yes
Quick Wash: Yes

EQUIPMENT

Adjustable Feet Back: Yes
Adjustable feet front: Yes

LI5 1080 EU
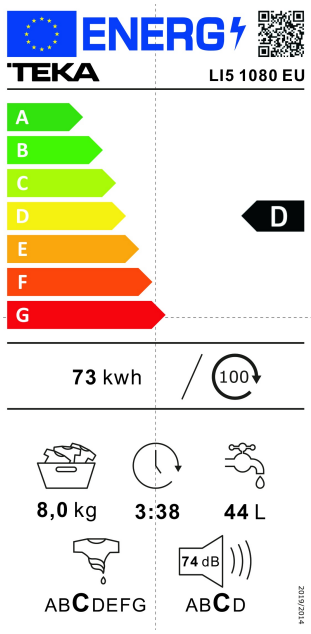
ENERGY LABEL