# **ML 8220 BIS** Urban Colors Edition Built-in Microwave with ceramic base

Ceramic base | Defrost By Time | Defrost By Weight | Direct Access Menu | Electronic Door Opening | 22L

| | |
|---|---|
| **DESCRIPTION** | Urban Colors Edition Built-in Microwave with ceramic base |
| **LIFE STYLE** | Maestro |
| **COLOURS** | |
| **REFERENCE** | REF. 112030001<br>EAN. 8434778007688 |

# ML 8220 BIS

**FEATURES**

Urban Colors Edition
Built-in Microwave + Grill
Ceramic base with uniform heating
3 cooking functions
9 direct access menus
5 power levels, 2500 W
Grill power: 1200 W
Defrost by time and weight
Touch control display with knobs
Double glazed door with left opening
Electronic door opening
Automatic disconnection when open door
Incandescent inner light
Dropdown grill
Quick start
Capacity (gross/net): 22 / 21,56 litres
Stainless steel cavity
Crunch plate included
Tangential ventilation

# ML 8220 BIS

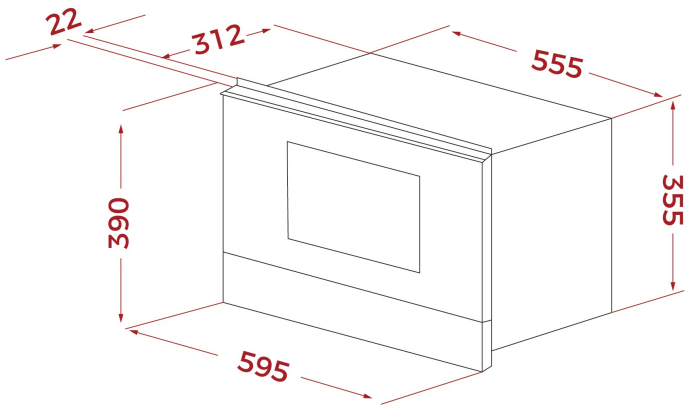


## DIMENSIONS

**Product height (mm):** 390
**Product width (mm):** 595
**Product depth (mm):** 334
**Product length (mm):**
**Net weight (Kg):** 23,2

## TECHNICAL DETAILS

### FEATURES

**Certificates:** CE/CB/Gmark
**Type of inner light:** INCANDESCENT
**Inside light position:** RIGHT
**Number of cooking functions:** 3
**Grill function:** Yes
**Drop-down grill:** Yes
**Number of guide levels (lower cavity):** 0
**Forced refrigeration tangential 1 speed:** Yes
**Microwave function:** Yes
**Microwave + Grill function:** Yes
**Number of power levels:** 5
**Minute Quick Start:** Yes
**Tangential ventilation:** Yes

### ELECTRIC CONNECTION

**Maximum Nominal Power (W):** 2700
**Frequency (Hz):** 50
**Power rate (V):** 220-240
**Cable Connection Length (cm):** 110
**Plug:** Yes
**Inside light Consumption (W):** 20

| | |
|---|---|
| **ENERGY CONSUMPTION** | **Grill (W):** 1200<br>**Maxi Grill (W):** 1200<br>**Cooling Fan Motor (W):** 18 |
| **SAFETY SYSTEMS** | **Automatic disconnection when opening the door:** Yes<br>**Panel blocking system:** Yes<br>**Grill protection:** Yes<br>**Safety Thermostat:** Yes |
| **ACCESSORIES** | **Crunch plate:** YES |