CALVIA
CALVIA CONCEALED BATH/SHOWER MIXER

REFERENCE

REF: 322410200 EAN: 8413509207610

FEATURES

1 ways concealed mixer Without shower set
Concealed part included
40 mm cartridge

DIMENSIONS

Product height (mm):
Product width (mm):
Product depth (mm):
Product length (mm):
Net weight (Kg):

COLOURS
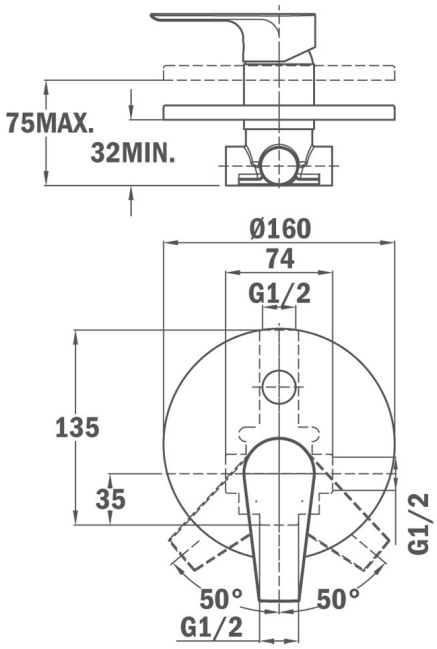
322410200 Chrome