PERFECTA4 DLH 985 T 90cm Decorative Hood with Touch Control Display and ECOPOWER A4 motor

LED lighting

Full A 4 energy label: A class in energy efficiency, fluid dynamic, lightning and grease filtering.

Stop delay timer

DESCRIPTION	90cm Decorative Hood with Touch Control Display and ECOPOWER A4 motor
LIFE STYLE	Maestro
COLOURS	
REFERENCE	REF. 40437100 EAN. 8421152145661

PERFECTA4 DLH 985 T

FEATURES

Ultraslim decorative hood
EcoPower motor
Energy Efficiency class: A
4A (Energy efficiency A, Fluid dynamic efficiency A, lighting efficiency A, grease filtering efficiency A)
Touch control panel
Operating Pilot Light
3 speeds + 1 intensive
Exhaust capacities:
Free Outlet, m^3/h: 795
Qboost, m3/h: 740
Max., m3/h: 586
Min., m^3/h: 306
Noise (LwA) Boost Speed, dB: 72
Noise (LwA) Max Speed, dB: 68
Noise (LwA) Min Speed, dB: 54
1 LED BAR
3 stainless steel filters (12 layers)
Stop delay timer
Filter saturation indicator

PERFECTA4 DLH 985 T

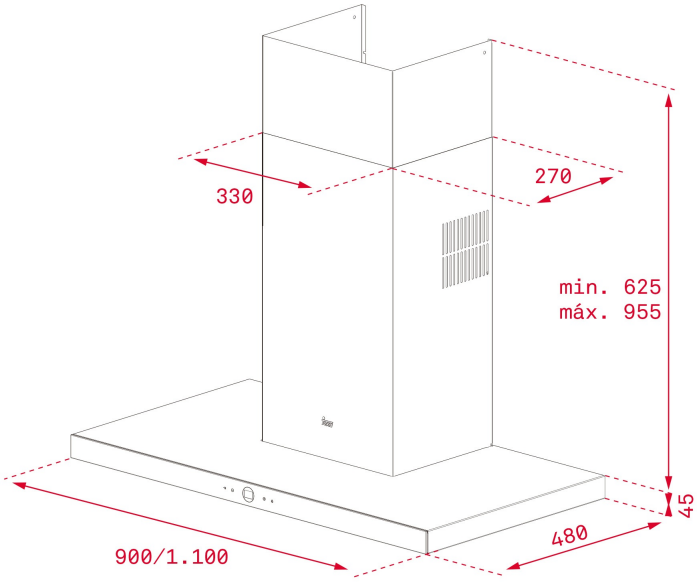

DIMENSIONS

Product height (mm): 670-1000
Product width (mm): 900
Product depth (mm): 480
Product length (mm):
Net weight (Kg): 15,33

TECHNICAL DETAILS

FEATURES

Certificates: CE; CB; Rohs
Ø Outlet (mm): 150
Type of inner light: LED
Inside light Consumption (W): 1 7
Plug type: Schuko plug
Power rate (V): 230
Frequency (Hz): 50
Total hood power (W): 287
Number of motors: 1
Motor power (W): 280
Air flow (Qmin) m3/h: 352
Air flow (Qmax): 651
Air flow (Qboost): 760

ACCESSORIES

Anti Return valve: Yes
Outlet reduction: Yes
Outlet extension: No
Optional Charcoal Filter: C1RTK
Regenerative charcoal filter: R1RTK
Conventional recirculation kit (opt) - w/tube cover: CFH 15200

L3C
Regenerative recirculation kit (opt) - w/tube cover: RFH 15200 L3C

MODELS

Number of filters: 3
Filter description: Stainless Steel filters MMX
Control panel: Touch Control (Glass Front) white display
Stop delay timer: Yes
Filter saturation indicator: Yes
Time clock: Yes
Number of speeds: 3+1

PERFECTA4 DLH 985 T
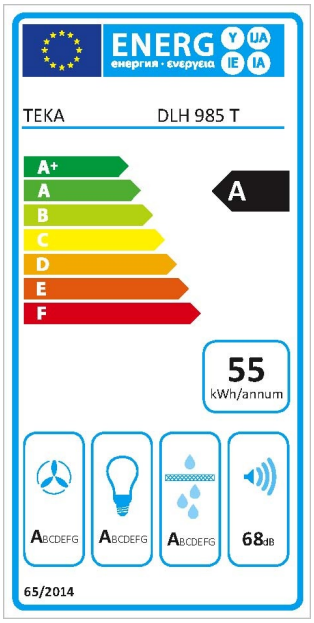
ENERGY LABEL