DW8 59 FI Free Standing Dishwasher for 12 place settings and 5 washing programs in 60cm

ECO function

DESCRIPTION	Free Standing Dishwasher for 12 place settings and 5 washing programs in 60cm
LIFE STYLE	Total
COLOURS	
REFERENCE	REF. 40716200 EAN. 8421152072172

DW8 59 FI

FEATURES

Fully integrated dishwasher
Electronic control panel
Place Settings: 12
Washing programs: 5
Washing temperatures: 38°, 55°, 65°, 70° C
3 in 1 selector
Dual half load
Fast program 38 minutes
Eco program
Third sprayer
5 positions water softener
Automatic adjustable upper basket
Indicator pilots for: On-off, lack of salt and rinse aid
Back feet adjustment from front
Energy class: A+/A
Noise level Db(A): 49
Power supply: 220/230V -50 Hz

DW8 59 FI

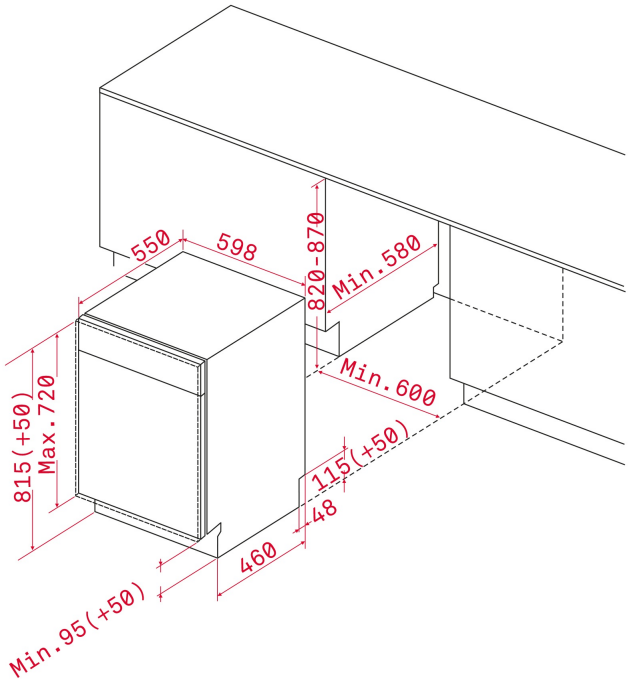

DIMENSIONS

Product height (mm): 820-870
Product width (mm): 596
Product depth (mm): 550
Product length (mm):
Net weight (Kg): 39

TECHNICAL DETAILS

FITTING MEASURES

Built-in niche height (cm): 82
Minimum door height (mm): 655
Maximum door height (mm): 820-870
Plinth (mm): 50
Door width (mm): 596

PRODUCT SHEET

Capacity (Place Settings): 12
Energy consumption (kWh/year): 289
Power consumption (Kwh): 1,03
Water consumption (litres/year): 3360
Water consumption (litres): 12
Noise level (dB): 49
Certificates: CE-VDE

POWER SUPPLY

Frequency (Hz): 50
Power rate (V): 220-230
Power rate (W): 1900
Plug type: EU
Maximum Nominal Power (W): 1900

FEATURES	**Type of installation:** Built-in **Control panel:** Electronic buttons **Number of programs:** 5 **Number Of Washing Temperatures:** 4 **Water softener:** Yes **Microfilter:** Yes
SAFETY SYSTEMS	**Internal Leakage Control:** Yes
CONTROL INDICATOR LIGHTS	**Low Salt Aid indicator:** Yes **Low Rinse Aid indicator:** Yes **Selected program indicator:** Yes **End of program acoustic alarm:** Yes **End of program visual alarm:** Yes
SPECIAL FUNCTIONS	**Fast program:** Yes **Fast program (minutes):** 38 **Economic program:** Yes **Alternative wash (Zone Wash):** Yes **Delayed Timer (h):** NO
EQUIPMENT	**Adjustable Feet Back:** Yes **Adjustable feet front:** Yes **3rd sprayer:** Yes **Adjustable back feet from front:** Yes

DW8 59 FI
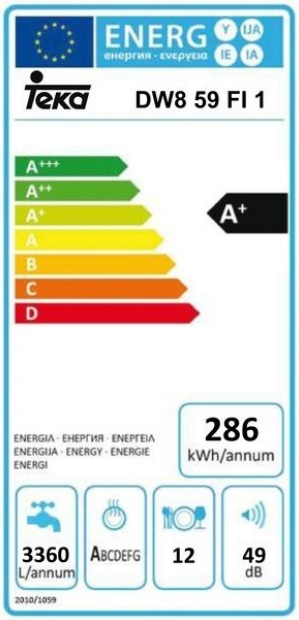
ENERGY LABEL