LP9 850 Free Standing Dishwasher for 14 place settings and third tray for cutlery

ECO function

MultiFlex-3, wtih flexible cutlery tray

Extra Dry function

SmartSensor

DESCRIPTION	Free Standing Dishwasher for 14 place settings and third tray for cutlery
LIFE STYLE	Maestro
COLOURS	
REFERENCE	REF. 40782501 EAN. 8421152153758

LP9 850

FEATURES

Free-standing dishwasher
Electronic control panel with display
Place settings: 14
Multifunctional third cutlery basket
Third sprayer
Washing programs: 8
Washing temperatures: 40°, 45°, 50°, 55°, 60°, 65°C
Dual Half load
Fast program 30 minutes
Eco Program
Full AquaStop safety system
Delay timer 1-24 hours
Adjustable upper basket (push-up)
Energy Class: A+++/A
Noise level: 44 dBA

TEKA

LP9 850

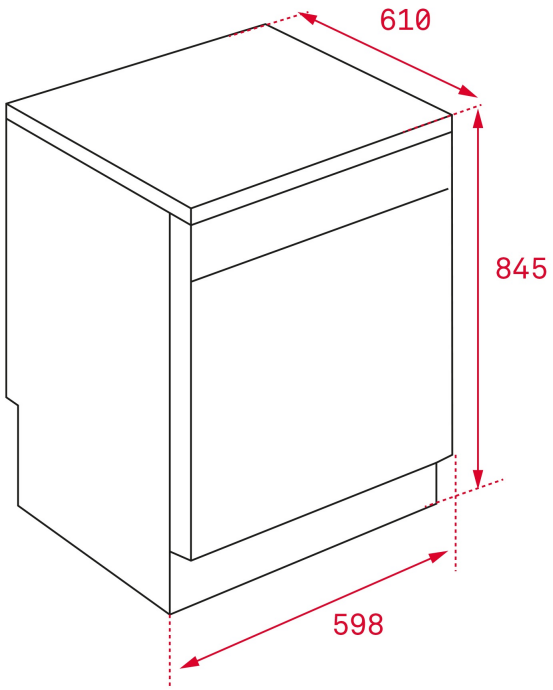

DIMENSIONS

Product height (mm): 845
Product width (mm): 598
Product depth (mm): 610
Product length (mm):
Net weight (Kg): 45,5

TECHNICAL DETAILS

FITTING MEASURES

Maximum door height (mm): 707
Door width (mm): 587

PRODUCT SHEET

Capacity (Place Settings): 14
Energy consumption (kWh/year): 237
Power consumption (Kwh): 0,83
Water consumption (litres/year): 2800
Water consumption (litres): 10
Standard program: ECO
Standard cycle duration (minutes): 220
Noise level (dB): 44
Certificates: GS/CE/EMC/Rohs

POWER SUPPLY

Frequency (Hz): 50
Power rate (V): 220-240
Power rate (W): 1760-2100
Plug type: EU
Maximum Nominal Power (W): 2100

FEATURES	**Type of installation:** Free standing **Control panel:** Electronic buttons **Control panel display:** Yes **Number of programs:** 8 **Number Of Washing Temperatures:** 6 **Aqua-Logic:** Yes **Water softener:** Yes **Microfilter:** Yes
SAFETY SYSTEMS	**Internal Leakage Control:** Yes **Aquastop:** Yes
CONTROL INDICATOR LIGHTS	**Low Salt Aid indicator:** Yes **Low Rinse Aid indicator:** Yes **Selected program indicator:** Yes **Remaining time:** Yes **End of program acoustic alarm:** Yes **End of program visual alarm:** Yes
SPECIAL FUNCTIONS	**Soak/Prewash program:** Yes **Economic program:** Yes **Alternative wash (Zone Wash):** Yes **Delayed Timer (h):** 1-24 hours
EQUIPMENT	**3rd Basket:** Yes **3rd sprayer:** Yes

LP9 850
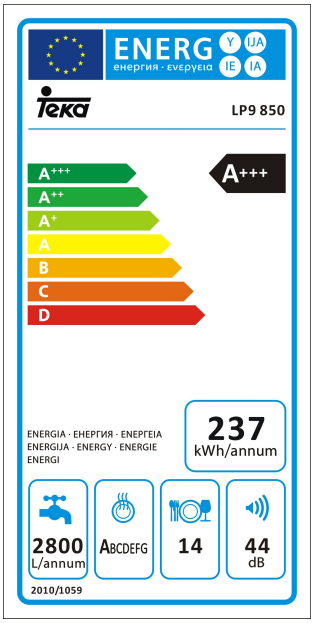
ENERGY LABEL