IZS 66700 MSP 60cm Modular Flex DirectSense Induction Hob with 4 zones with Slide cooking system

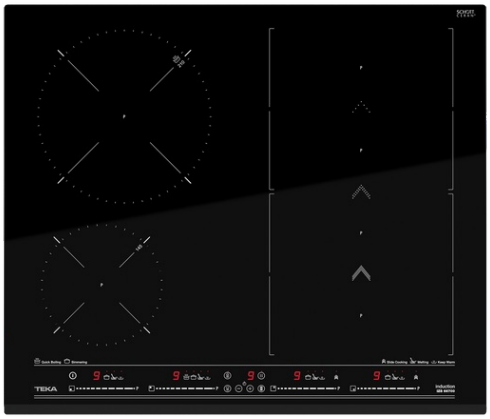

MultiSlider, for independant control of each cooking zone

Autolock

Power function

Power Plus function

Easy installation system

DESCRIPTION	60cm Modular Flex DirectSense Induction Hob with 4 zones with Slide cooking system
LIFE STYLE	Maestro
COLOURS	
REFERENCE	REF. 112500003 EAN. 8434778000924

IZS 66700 MSP

FEATURES

Induction hob
FLEX induction with Slide Cooking function
Touch Control Multislider
Cooking timer
5 cooking combinations (4 + 1 Flex zone)
2 zones of 230 x 200 mm
1 Flex zone of 230 x 400 mm
1 induction zone of Ø 210 mm
SlideCooking function available in the Flex zone
Special cooking functions: Quick Boiling, Melting, Simmering and KeepWarm
Power Plus function
Child lock
Stop & Go function
Silence mode
Residual heat indicators
Fast-Click easy installation
Maximum nominal power: 7.400 W

IZS 66700 MSP

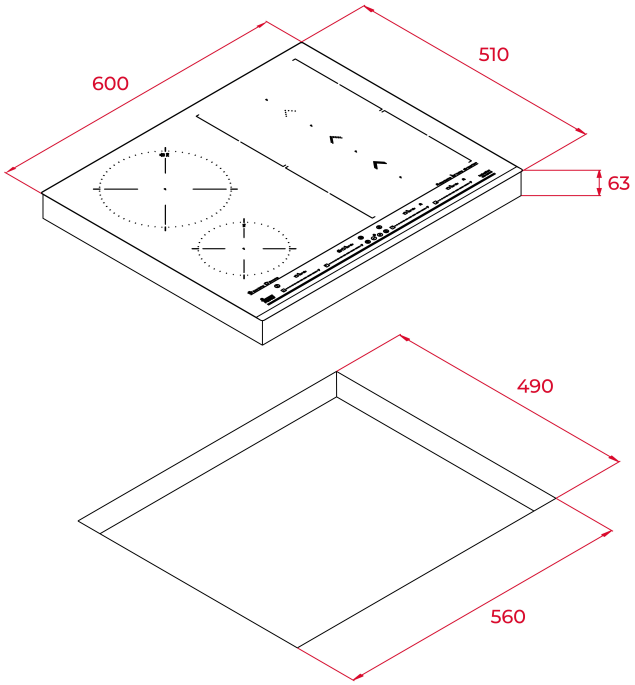

DIMENSIONS

Product height (mm): 53
Product width (mm): 600
Product depth (mm): 510
Product length (mm):
Net weight (Kg): 13,5

TECHNICAL DETAILS

FITTING MEASURES	**Built-in Width (mm):** 560 **Built-in Depth (mm):** 490 **Built-in height (mm):** 49
FEATURES	**Number of electric power levels:** 9 **Simmering:** Yes **Melting:** Yes **Keeping warm:** Yes **Power management function:** Yes
ELECTRIC CONNECTION	**Frequency (Hz):** 50/60 **Power rate (V):** 220-240 **Cable Connection Length (cm):** 110 **Maximum Nominal Power (W) (Electric hob):** 7400
COOKING ZONES	**Cooking Zones:** 4

Energy consumption for the whole hob, Wh/Kg: 193,8

SAFETY SYSTEMS

Residual heat indicator (Gas): Yes
Residual heat indicator (Electric hob): Yes
Automatic safety disconnection (Auto Lock) (Electric hob): Yes
Safety Blocking: Yes
Child lock: Yes

FINISH

Surface finishing: Front bevelled glass
Surface type: Ceramic Glass (4mm)
Easy installation system: Yes

ACCESSORIES

Junction Kit: NO
Teppan Yaki: Optional