IBC 72300 TCS 70cm Induction Hob with 2 cooking zones and Touch Control Slider

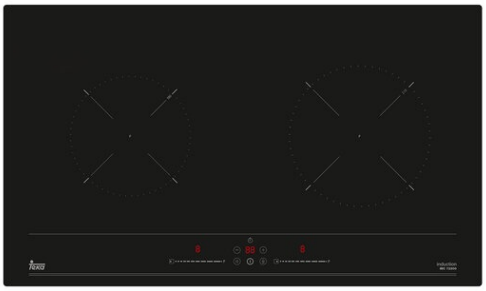

DESCRIPTION	70cm Induction Hob with 2 cooking zones and Touch Control Slider
LIFE STYLE	Total
COLOURS	
REFERENCE	REF. 112510003 EAN. 8434778001440

IBC 72300 TCS

FEATURES

Induction hob with 2 cooking zones in 73cm
Touch control slider
Stop&Go function
Time delay function
2 cooking areas: 1 induction zone, Ø 180 mm & 1 induction zone, Ø 210 mm
Residual heating indicator
Maximum total power: 4,000W

IBC 72300 TCS

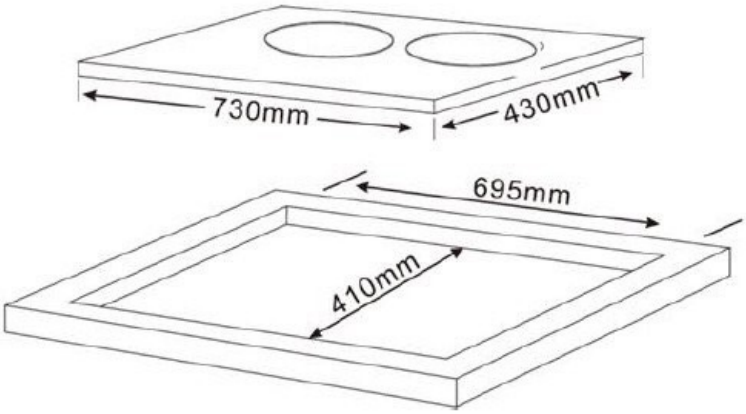

DIMENSIONS

Product height (mm):
Product width (mm):
Product depth (mm):
Product length (mm):
Net weight (Kg): 8,2