STYLO 1B Inset Stainless Steel Sink 1 bowl

Antibacterial

DESCRIPTION	Inset Stainless Steel Sink 1 bowl
LIFE STYLE	Total
COLOURS	
REFERENCE	REF. 10107026 EAN. 8421152027431

STYLO 1B

FEATURES	Inset Sink, 1 bowl Stainless Steel AISI 304 Overall: 465 x 485 mm. Bowl: 400 x 360 x 160 mm. 3½ Basket waste with Overflow Bowl depth: 160 mm 50 cm base unit

STYLO 1B

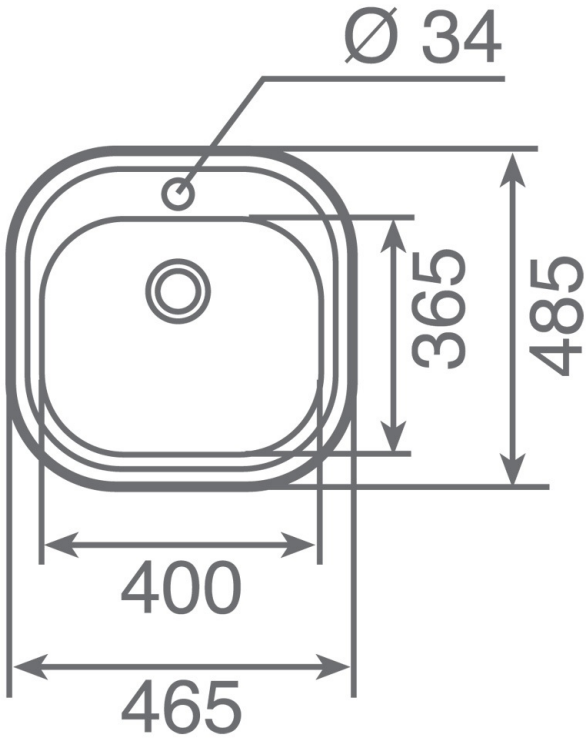

DIMENSIONS

Product height (mm):
Product width (mm): 485
Product depth (mm): 165
Product length (mm): 465
Net weight (Kg): 1,82

TECHNICAL DETAILS

MAIN BOWL	**Main Bowl Length (mm):** 400 **Main Bowl Width (mm):** 360 **Main Bowl Depth (mm):** 165
OTHER FEATURES	**Material:** Stainless Steel **Type of installation:** Inset **Number of tap holes:** 1 **Valve hole type:** 3½" **Overflow hole:** Round **Sink Bowl / Top thickness (mm):** 0,7
OTHERS	**Base unit (cm):** 45
SINK LAY OUT	**Number of bowls:** 1 **Number of drainers:** 0

ACCESSORIES	**Soundproof:** Yes **Installation clips:** Yes