FlexLinea RS15 71.40 3-in-1 Installation Stainless Steel Sink with one bowl

Main bowl depth: 200mm

Antibacterial

Lifetime warranty + SilentSmart system

R15, easy to clean

DESCRIPTION	3-in-1 Installation Stainless Steel Sink with one bowl
LIFE STYLE	Maestro
COLOURS	
REFERENCE	REF. 115000011 EAN. 8434778004373

FlexLinea RS15 71.40

FEATURES

PureLine stainless steel sink, One bowl
Finish: Polished
3-in-1 installation: Inset/top, undermount & flush
Easy clean radius R15 corners
3½" SQ manual basket waste with overflow and siphon
Decorative SQ cover
SilentSmart, 50% less noise
80 cm base unit
Thickness: 1.0 mm
Packaging: Individual carton box

FlexLinea RS15 71.40

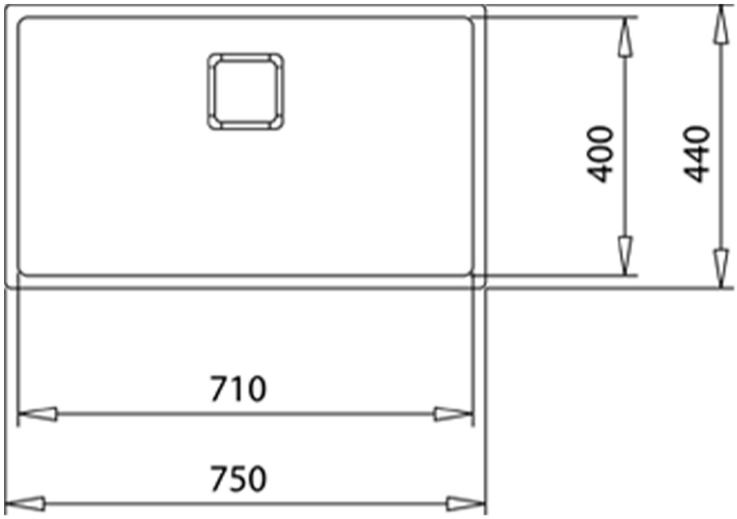

DIMENSIONS

Product height (mm):
Product width (mm): 440
Product depth (mm): 200
Product length (mm): 750
Net weight (Kg): 5,26

TECHNICAL DETAILS

MAIN BOWL	**Main Bowl Length (mm):** 710 **Main Bowl Width (mm):** 400 **Main Bowl Depth (mm):** 200
OTHER FEATURES	**Material:** Stainless Steel **Type of installation:** Top,Flush,Undermount **Valve hole type:** 3½" SQUARED **Overflow hole:** Rectangular **Sink Bowl / Top thickness (mm):** 1,0
OTHERS	**Base unit (cm):** 80
SINK LAY OUT	**Number of bowls:** 1 **Number of drainers:** 0
ACCESSORIES	**Soundproof:** Yes

SilentSmart: Yes
Installation clips: Yes
Siphon: Yes