# DLH 1186 T

Decorative hood with touch control display and EcoPower motor, 120cm A+

LED



Stop Delay Timer

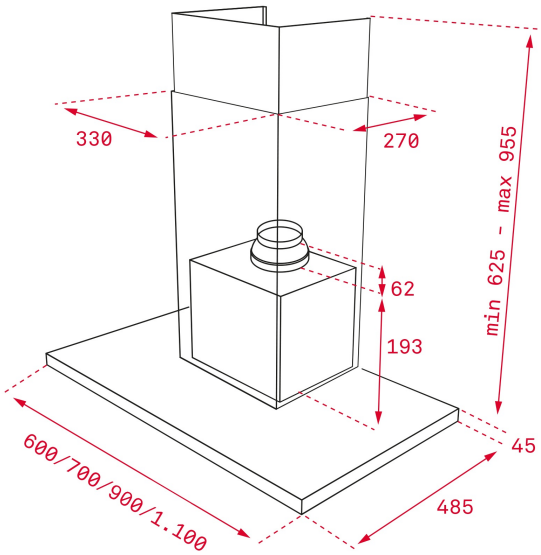


## REFERENCE

REF: 40487183 EAN: 8421152157459

## FEATURES

Decorative horizontal hood
Touch control
EcoPower motor
3 speeds + 1 intensive
Free Outlet exhaust capacity (m3/h): 920
Intensive speed exhaust capacity (m3/h):701
Max speed exhaust capacity (m3/h): 584
Min speed exhaust capacity (m3/h): 303
Intensive speed sound level (dBA): 60
Max speed sound level (dBA): 57
Min speed sound level (dBA): 53
1 LED lamp
4 Stainless Steel filters
Stop delay timer
Filter saturation indicator
Operating pilot light
Anti-return valve included
Outlet reduction included

## DIMENSIONS

**Product height (mm):** 670-1000
**Product width (mm):** 900
**Product depth (mm):** 480
**Product length (mm):**
**Net weight (Kg):** 16,64

## TECHNICAL DETAILS

Energy Efficiency Class: A+
Noise (LwA) Min Speed (dB): 53
Noise (LwA) Max Speed (dB): 69
Noise (LwA) Boost Speed (dB): 72
Ø Outlet (mm): 150

## COLOURS

40487183 Black glass with steel