HSC 644 C

Multifunction compact oven with microwave, 11 cooking functions and HydroClean system

Defrost By Time | Defrost By Weight | 40L | HydroClean steam cleaning system | SurroundTemp

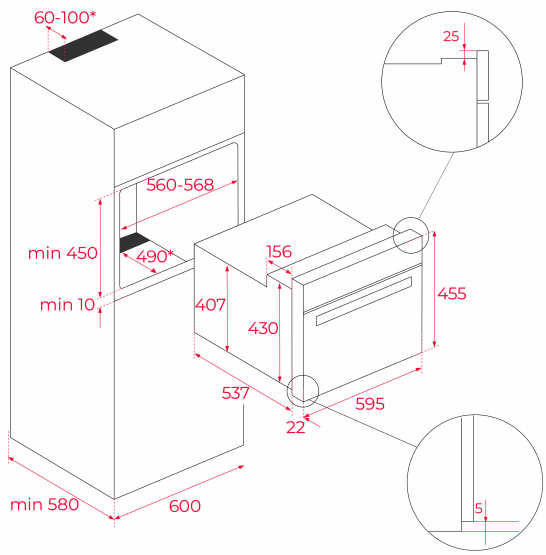

REFERENCE

REF: 40587603 EAN: 8421152145470

FEATURES

Multifunction SurroundTemp oven + Microwave
11 cooking functions
5 power levels + 1000 W microwave power
2500 W Grill
Defrost by time and weigh
HydroClean system
Touch control display with knobs
Electronic timer (Delay/Start function)
Chrome supports with 5 cooking levels
Removable triple glazed door
Automatic disconnection security system
Children safety lock
Anti-tip glass tray and reinforced grid
Capacity (gross/net): 41 / 40 litres

DIMENSIONS

Product height (mm): 455
Product width (mm): 595
Product depth (mm): 559
Product length (mm):
Net weight (Kg): 30

TECHNICAL DETAILS

Energy Efficiency Class: A+
Power rate (V): 220-240
Frequency (Hz): 50
Maximum Nominal Power (W): 3400

COLOURS

40587603 Stainless steel