GBC 64003
Gas on Glass hob with frontal ergonomic knobs and 4 cooking zones

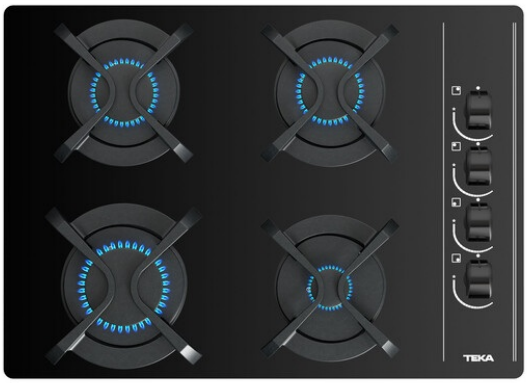

Auto ignition | Autolock | Easy installation

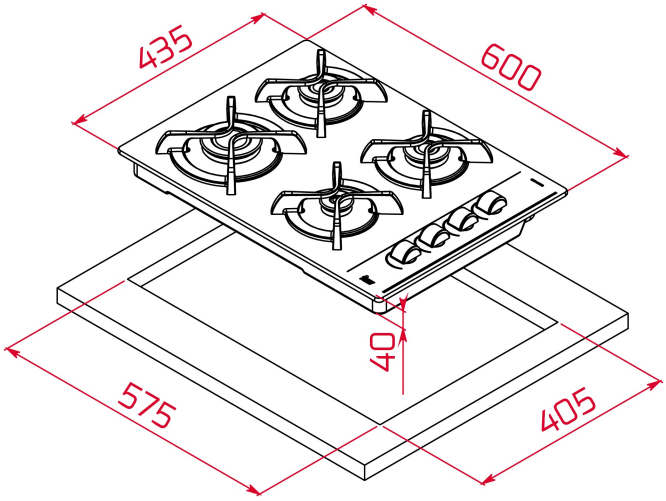

REFERENCE

REF: 112580004 EAN: 8434778003628

FEATURES

Gas on glass hob
Lateral control knobs with ergomic desing
4 cooking zones
1 fast burner, 2.8 kW
2 semi fast burners, 1.7 kW
1 auxiliary burner, 1 kW
Tempered glass surface
Auto ignition
Auto-lock safety system
Cast iron grids
Easy installation kit
Maximum nominal power 7300 W

DIMENSIONS

Product height (mm): 110
Product width (mm): 600
Product depth (mm): 435
Product length (mm):
Net weight (Kg): 12,15

TECHNICAL DETAILS

Power rate (V): 220-240
Frequency (Hz): 50/60
Maximum Nominal Power (W): -

COLOURS

112580004 Black glass

112580003 Black glass

ENERGY EFFICIENCY

Power consumption in standby mode (W): -
Time to reach standby mode (min): -