ML 822 BIS L BK-SS

Built-in microwave with ceramic base, grill and left door opening

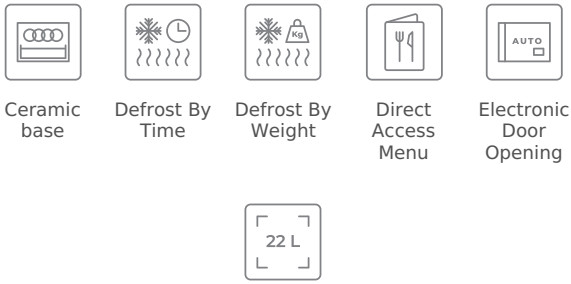

Ceramic base | Defrost By Time | Defrost By Weight | Direct Access Menu | Electronic Door Opening | 22L

REFERENCE

REF: 40584300 EAN: 8421152145494

FEATURES

Built-in Microwave + Grill
Ceramic base with uniform heating
3 cooking functions
9 direct access menus
5 power levels, 2500 W
Grill power: 1200 W
Defrost by time and weight
Touch control display with knobs
Double glazed door with right opening
Electronic door opening
Children safety lock
Automatic disconnection when open door
Incandescent inner light
Dropdown grill
Quick start
Capacity (gross/net): 22 / 21.56 litres
Stainless steel cavity
Tangential ventilation

DIMENSIONS

Product height (mm): 390
Product width (mm): 595
Product depth (mm): 334
Product length (mm):
Net weight (Kg): 23,2

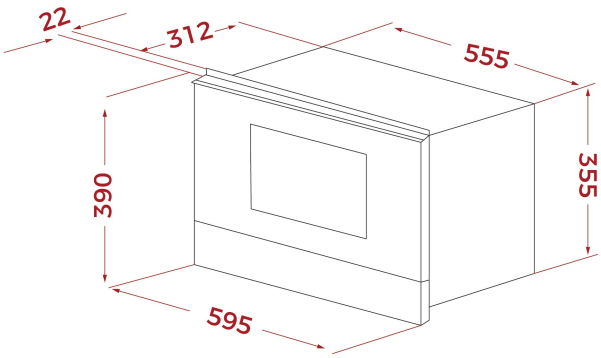

TECHNICAL DETAILS

MWO Power (W): 850
Frequency (Hz): 50
Maximum Nominal Power (W): 2700
Grill (W): 1200

COLOURS

40584300	Black glass with frame
40584301	White glass with frame
40584301	Black glass with frame