MAESTRO **MY Compact**

Professional Kitchen Tap Mixer and extractable handle

REFERENCE

REF: 3893702 EAN: 8421152052303

FEATURES

Professional kitchen tap
Swivel and flexible spout 360°
Anti-scale aerator
Pull-down shower 2 functions: normal & shower spray
High resistant flexible spring
Flexible stainless steel pipe with plastic coating (protection and easy cleaning)
Cartridge with ceramic discs and adjustable flow and temperature
3/8" flexible inlet pipes

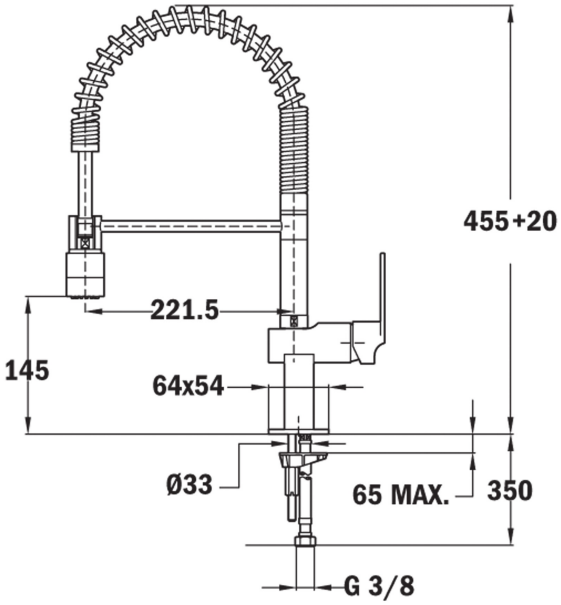

DIMENSIONS

Product height (mm):
Product width (mm):
Product depth (mm):
Product length (mm):
Net weight (Kg): 3,22

COLOURS

3893702 Chrome