RLF 85950 GBK
Full No Frost Side by Side refrigerator with inverter motor and wine cooler

Motor Inverter | On Holidays function | Easy 90 | Full No Frost | LED

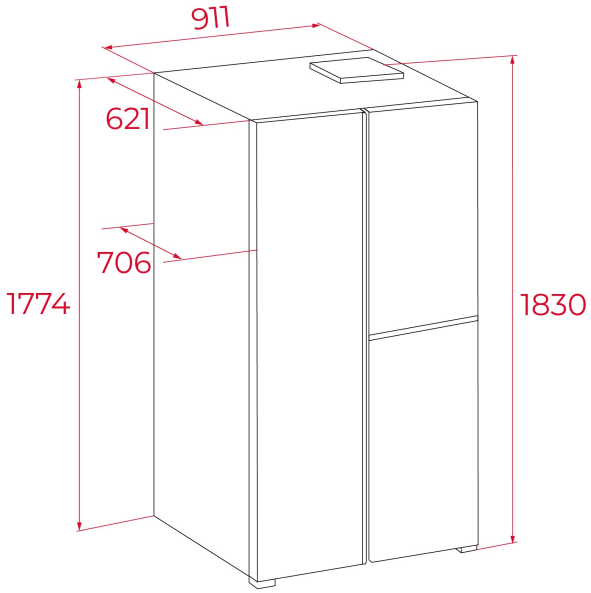

REFERENCE

REF: 113430074 EAN: 8434778030426

FEATURES

Side by Side refrigerator with wine cooler
Full No frost
Inverter motor
Outer control display
Electronic adjustable thermostat
Capacity: 6 bottles in the refrigerator, 18 bottles in the wine cooler
1 Vegetable drawer
1 Multipurpose compartment
3 safety glass shelves with mettalic finishing
On holidays function
Metal Cooling
Integrated handle
Acoustic alarm
Front adjustable feet
Freezer inner shelves
LED illumination
Easy 90º
Climate class: SN/N/ST
Total capacity: 548 litres
Bottle rack, twister ice maker and ice cube tray included

DIMENSIONS

Product height (mm): 1830
Product width (mm): 911
Product depth (mm): 706
Product length (mm):
Net weight (Kg): 113

TECHNICAL DETAILS

Energy efficiency class (UE 2019/2016): E
Climate Class: SN/N/ST
Energy Consumption (Kw/day): 0.505
Annual Consumption (kWh/year): 327
Freezing Capacity: 14
Noise Level (dBA): 38
Power rate (V): 220-240V
Frequency (Hz): 50HZ

COLOURS

113430074 Black glass