IKNOB IT 6350 60cm iKnob Touch Control Induction Hob with 3 zones

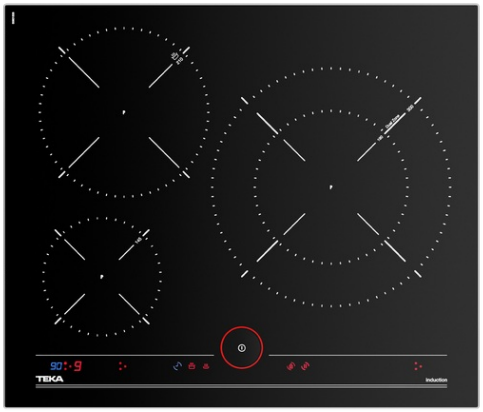

Autolock | Power | Power Plus | Syncro function | Easy installation

DESCRIPTION	60cm iKnob Touch Control Induction Hob with 3 zones
LIFE STYLE	Maestro
COLOURS	
REFERENCE	REF. 10210183 EAN. 8421152148488

IKNOB IT 6350

FEATURES

Induction hob
Direct functions: Quick boiling and keep warm
iKnob Touch Control
3 cooking zones
1 zone Ø 190/300 mm
1 zone Ø 215 mm
1 zone Ø 145 mm
Ceramic glass surface
Auto-lock safety system
Cooking timer
Power plus
Child lock
Residual heat indicator
Power management
Easy installation kit
Maximum nominal power 7400 W
Optional: Grilling plate
Optional: Teppanyaki

IKNOB IT 6350

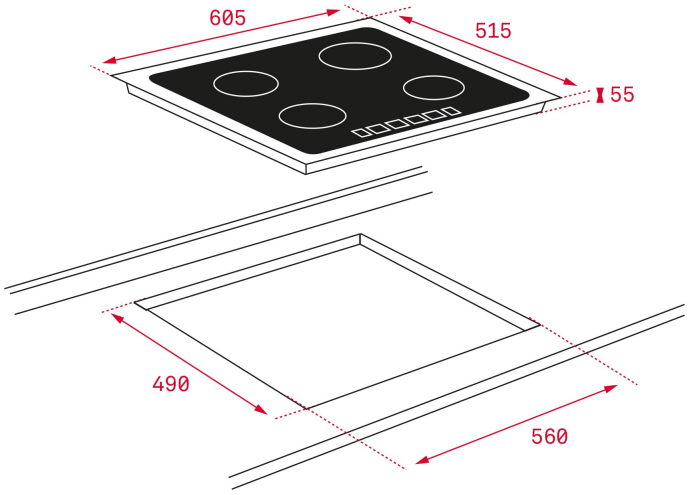

DIMENSIONS

Product height (mm): 50
Product width (mm): 605
Product depth (mm): 515
Product length (mm):
Net weight (Kg): 10,7

TECHNICAL DETAILS

FITTING MEASURES	**Built-in Width (mm):** 560 **Built-in Depth (mm):** 490 **Built-in height (mm):** 50
FEATURES	**Number of electric power levels:** 9 **Keeping warm:** Yes **Power management function:** Yes **Synchro:** Yes
ELECTRIC CONNECTION	**Frequency (Hz):** 50/60 **Power rate (V):** 220-240 **Cable Connection Length (cm):** 110 **Maximum Nominal Power (W) (Electric hob):** 7400
COOKING ZONES	**Cooking Zones:** 3 **Energy consumption for the whole hob, Wh/Kg:** 184

SAFETY SYSTEMS	**Residual heat indicator (Gas):** Yes **Residual heat indicator (Electric hob):** Yes **Automatic safety disconnection (Auto Lock) (Electric hob):** Yes **Safety Blocking:** Yes **Child lock:** Yes
FINISH	**Surface finishing:** Slim metal frame **Surface type:** Ceramic Glass (4mm) **Easy installation system:** Yes
ACCESSORIES	**Junction Kit:** NO **Teppan Yaki:** Optional