CNL 9815 PLUS 90cm Pull-out Hood with ECOPOWER motor and and 5+1 speeds

LED

Stop Delay Timer

DESCRIPTION	90cm Pull-out Hood with ECOPOWER motor and and 5+1 speeds
LIFE STYLE	Maestro
COLOURS	
REFERENCE	REF. 40436860 EAN. 8421152146262

CNL 9815 PLUS

FEATURES

Pull-out hood
Electronic control
5 speeds + 1 intensive
Free Outlet exhaust capacity (m3/h): 734
Intensive speed exhaust capacity (m3/h): 730
Max speed exhaust capacity (m3/h): 555
Min speed exhaust capacity (m3/h): 295
Intensive speed sound level (dBA): 70
Max speed sound level (dBA): 65
Min speed sound level (dBA):53
1 LED lamps
4 Stainless Steel filters
Stop delay timer
Fingerprint proof front panel
Exchangeable Front Panel
Anti-return valve included
Outlet reduction included
Optional Charcoal Filter: D1C

CNL 9815 PLUS

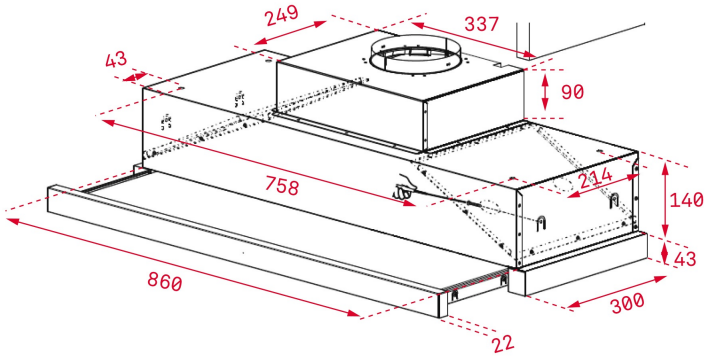

DIMENSIONS

Product height (mm): 274
Product width (mm): 900
Product depth (mm): 300/490
Product length (mm):
Net weight (Kg): 11,85

TECHNICAL DETAILS

FEATURES

Certificates: CE; CB; Rohs
Ø Outlet (mm): 150
Type of inner light: LED
Inside light Consumption (W): 12
Plug type: European plug
Power rate (V): 230
Frequency (Hz): 50
Total hood power (W): 277
Number of motors: 1
Motor power (W): 265
Air flow (Qmin) m3/h: 295
Air flow (Qmax): 555
Air flow (Qboost): 730

ACCESSORIES

Anti Return valve: Yes
Outlet reduction: Yes
Outlet extension: No
Optional Charcoal Filter: D1C
Conventional recirculation kit (opt) - w/tube cover: No

MODELS	**Number of filters:** 4 **Filter description:** Stainless Steel filters MMX **Control panel:** Electronic **Stop delay timer:** Yes **Automatic lighting:** Yes **Number of speeds:** 5+1 **Fingerprint proof front panel:** Yes

CNL 9815 PLUS
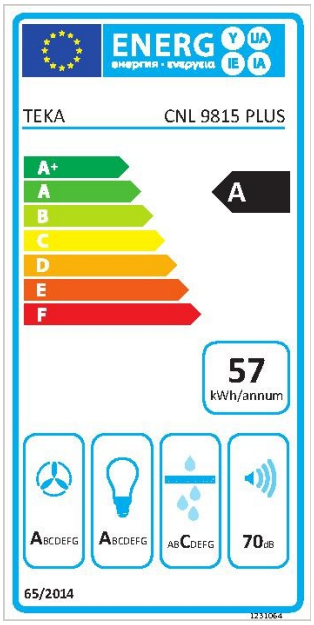
ENERGY LABEL