TL 6310 SS 60cm Pull-out Hood with doble motor turbine and 2 speeds

LED

DESCRIPTION	60cm Pull-out Hood with doble motor turbine and 2 speeds
LIFE STYLE	Easy
COLOURS	
REFERENCE	REF. 40474250 EAN. 8421152145975

TL 6310 SS

FEATURES

Pull-out hood
Mechanical control
2 speeds
Free Outlet exhaust capacity (m3/h): 366
Max speed exhaust capacity (m3/h): 332
Min speed exhaust capacity (m3/h): 233
Max speed sound level (dBA): 54
Min speed sound level (dBA): 45
2 LED lamps
2 aluminium filters
Exchangeable front panel
Anti-return valve included
Optional Charcoal Filter: CNL 1C

TL 6310 SS

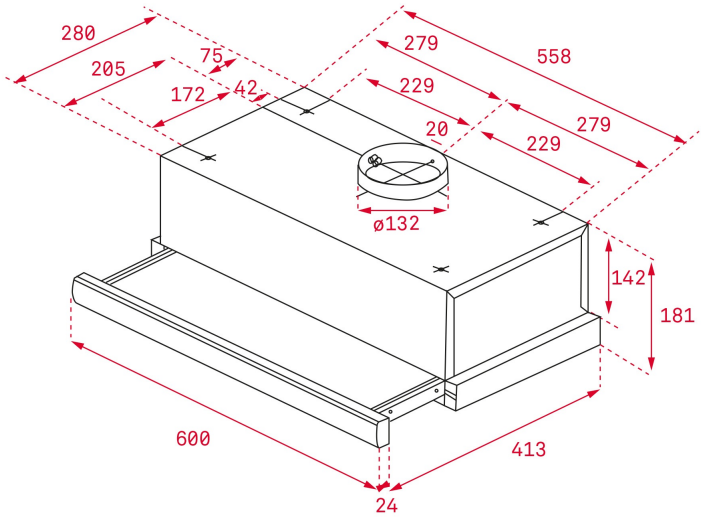

DIMENSIONS

Product height (mm): 181
Product width (mm): 600
Product depth (mm): 304-437
Product length (mm):
Net weight (Kg): 6,1

TECHNICAL DETAILS

FEATURES

Certificates: CE; CB; Rohs
Ø Outlet (mm): 120
Type of inner light: LED
Inside light Consumption (W): 6
Plug type: Europlug
Cable Connection Length (cm): 150
Power rate (V): 230
Frequency (Hz): 50
Total hood power (W): 146
Number of motors: 1
Motor power (W): 130
Air flow (Qmin) m3/h: 160
Air flow (Qmax): 304

ACCESSORIES

Anti Return valve: Yes
Outlet extension: no
Optional Charcoal Filter: CNL 1C

MODELS

Number of filters: 2

Filter description: Aluminium
Control panel: Mechanical
Automatic lighting: Yes
Number of speeds: 2

TL 6310 SS
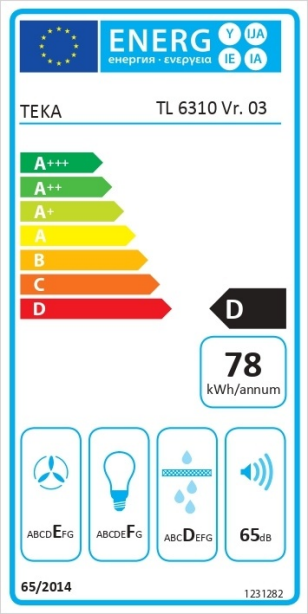
ENERGY LABEL