DSJ 980 90cm A Decorative Hood with EcoPower motor

LED

DESCRIPTION	90cm A Decorative Hood with EcoPower motor
LIFE STYLE	Easy
COLOURS	
REFERENCE	REF. 40484821 EAN. 8421152157329

DSJ 980

FEATURES

Decorative horizontal hood
Electronic control with display
4 speeds
Free Outlet exhaust capacity (m3/h): 638
Max speed exhaust capacity (m3/h): 614
Min speed exhaust capacity (m3/h): 268
Max speed sound level (dBA): 66
Min speed sound level (dBA): 48
1 LED lamp
3 Aluminum filters
Operating pilot light
Anti-return valve included
Outlet reduction included
Optional recirculation kit with tube cover installation: D1CTP
Optional Charcoal Filter: D1C

DSJ 980

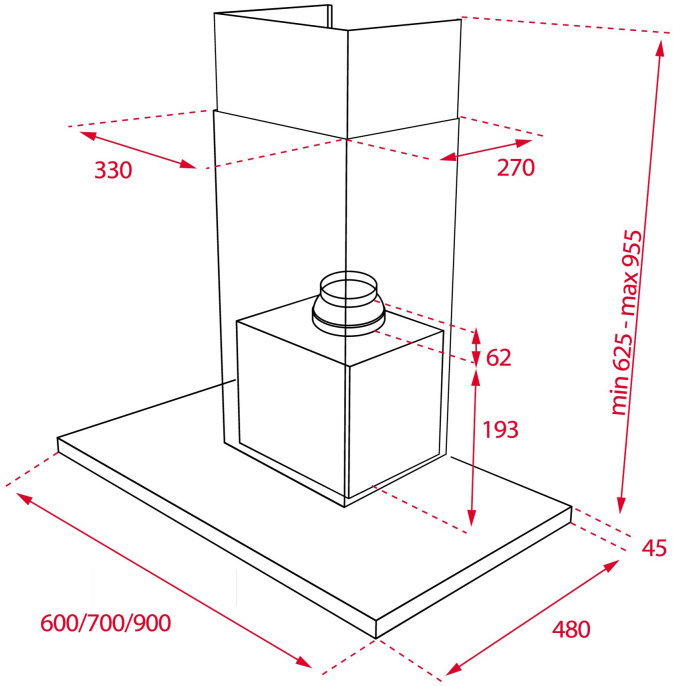

DIMENSIONS

Product height (mm): 670-1000
Product width (mm): 900
Product depth (mm): 480
Product length (mm):
Net weight (Kg): 15,33

TECHNICAL DETAILS

FEATURES

Certificates: CE; CB; Rohs
Ø Outlet (mm): 150
Type of inner light: LED
Inside light Consumption (W): 1,5
Plug type: Schuko plug
Power rate (V): 230
Frequency (Hz): 50/60
Total hood power (W): 223
Number of motors: 1
Motor power (W): 220
Air flow (Qmin) m3/h: 268
Air flow (Qmax): 614

ACCESSORIES

Anti Return valve: Yes
Outlet reduction: Yes
Outlet extension: No
Optional Charcoal Filter: C1RTK
Regenerative charcoal filter: R1RTK
Conventional recirculation kit (opt) - w/tube cover: CFH 15200 L3C

Regenerative recirculation kit (opt) - w/tube cover: RFH 15200 L3C

MODELS

Number of filters: 3
Filter description: Stainless Steel filters
Control panel: Rectangular Push Buttons
Number of speeds: 4

DSJ 980
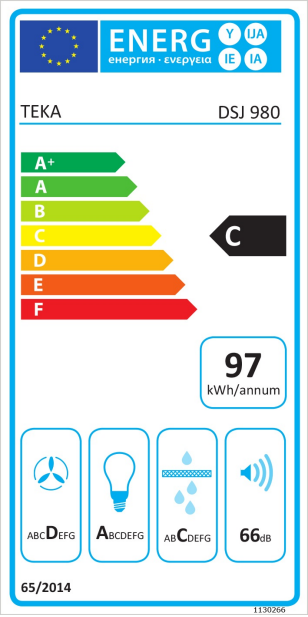
ENERGY LABEL