MY1 Professional Kitchen Tap Flexible Mixer

Anti-Scale Aerator

High Resistance

Pull Down Shower

Swivel Spout

DESCRIPTION	Professional Kitchen Tap Flexible Mixer
LIFE STYLE	Maestro
COLOURS	
REFERENCE	REF. 1816002 EAN. 8421152043318

MY1

FEATURES

Professional kitchen tap
Swivel and flexible spout
Anti-scale aerator
Pull-down shower 2 functions: normal & shower spray
Cartridge with ceramic discs of high resistance
Highly precise temperature control
Greater handling sensitivity
High resistant flexible spring
Stainless steel flexible hose reinforced with plastic for better protection and easy cleaning
3/8" flexible inlet pipes

MY1

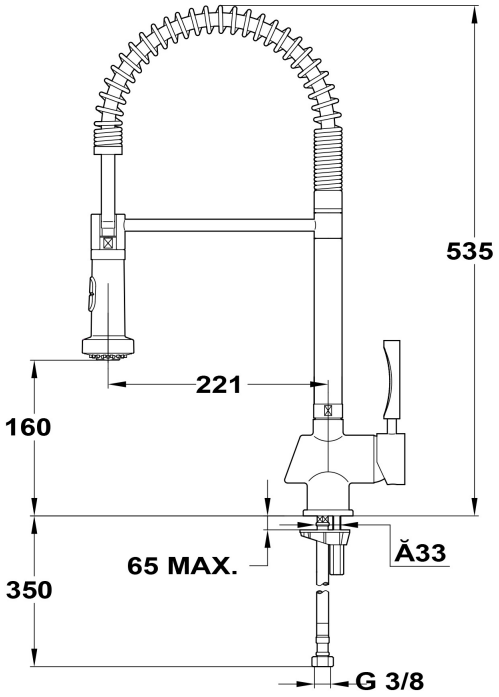

DIMENSIONS

Product height (mm): 535
Product width (mm):
Product depth (mm):
Product length (mm):
Net weight (Kg): 3,2

TECHNICAL DETAILS

MODELS	**Type of installation:** Free standing