IC 915 Single lever Kitchen Tap with high spout Swivel Aerator

Anti-Scale Aerator

Swivel Spout

DESCRIPTION	Single lever Kitchen Tap with high spout Swivel Aerator
LIFE STYLE	Total
COLOURS	
REFERENCE	REF. 33915020N EAN. 8421152091364

IC 915

FEATURES

High spout kitchen tap
Flat design
Swivel Spout
Anti-scale aerator
Cartridge with ceramic discs of high resistance
Highly precise temperature control
Greater handling sensitivity with smoother movements
3/8" flexible inlet pipes

IC 915

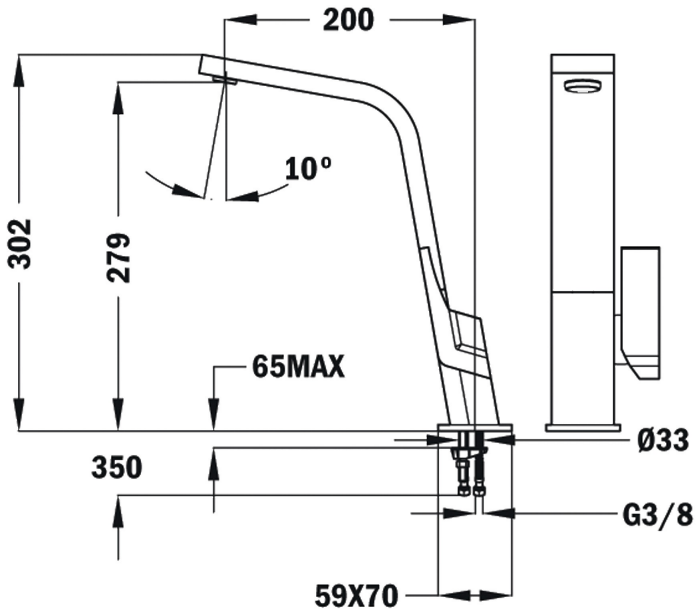

DIMENSIONS

Product height (mm): 302
Product width (mm):
Product depth (mm):
Product length (mm):
Net weight (Kg): 2,4

TECHNICAL DETAILS

MODELS	**Type of installation:** Free standing