SteamGourmet HLB 8550 SC

Multifunction SurroundTemp Oven with special Steam function

70L capacity | SoftClose | SurroundTemp extra rear resistance for a uniform cooking | HydroClean | Plus extension telescopic guide

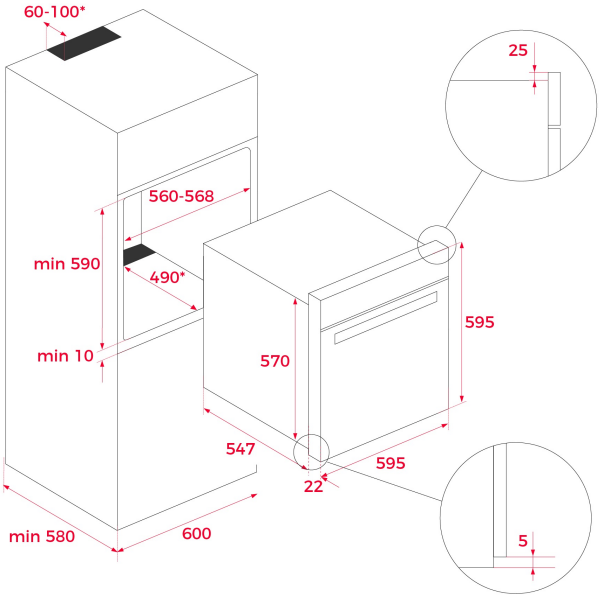

REFERENCE

REF: 111200001 EAN: 8434778024777

FEATURES

Multifunction SurroundTemp Steam oven
12 cooking functions
Automatic SteamClean system
Touch control display with knobs
Electronic timer
Chrome supports with 5 cooking levels
Easy slide telescopic guides
Removable triple glazed door
Automatic disconnection security system
SoftClose system
Automatic quick preheating
Anti-tip deep tray
Baking tray and reinforced grid included
Capacity (gross/net): 71 / 70 litres

DIMENSIONS

Product height (mm): 595
Product width (mm): 595
Product depth (mm): 537+22
Product length (mm):
Net weight (Kg): 32

TECHNICAL DETAILS

Energy Efficiency Class: A+
Power rate (V): 220/240
Frequency (Hz): 50/60
Maximum Nominal Power (W): 3215

COLOURS

111200001 Black Glass