MAESTRO **HLB 860**

A+ Multifunction-Surround Temp. oven with 20 recipes, Soft Close

70L | Plus Extension Telescopic Guide | HydroClean | SoftClose | SurroundTemp

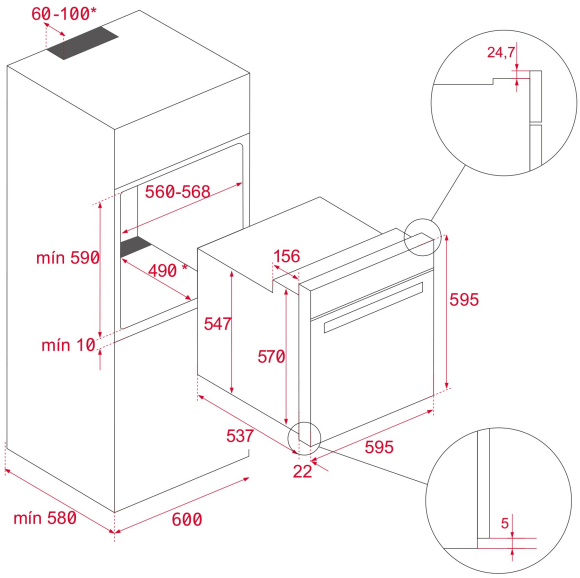

REFERENCE

REF: 41560097 EAN: 8421152154748

FEATURES

Multifunction SurroundTemp oven
12 cooking functions
Automatic HydroClean system
Touch control display with knob
Personal cooking assistant: 20 automatic programs
Chrome supports with 5 cooking levels
Easy slide telescopic guides
Removable triple glazed door
SoftClose system
Children safety lock
Automatic disconnection safety system
Automatic quick preheating
Anti-tip deep tray and reinforced grid
Capacity (gross/net): 71 / 70 litres

DIMENSIONS

Product height (mm): 595
Product width (mm): 595
Product depth (mm): 537+22
Product length (mm):
Net weight (Kg): 32

TECHNICAL DETAILS

Energy Efficiency Class: A+
Power rate (V): 220-240
Frequency (Hz): 50/60
Maximum Nominal Power (W): 3215

COLOURS

41560097 White Glass with StainlessSteel frame

41560090 Black Glass with StainlessSteel frame