HRB 6400 VNS

Country Style Edition. Multifunction oven with 9 cooking functions

70L | Plus extension guides: 75% extraction | HydroClean steam cleaning system | SurroundTemp

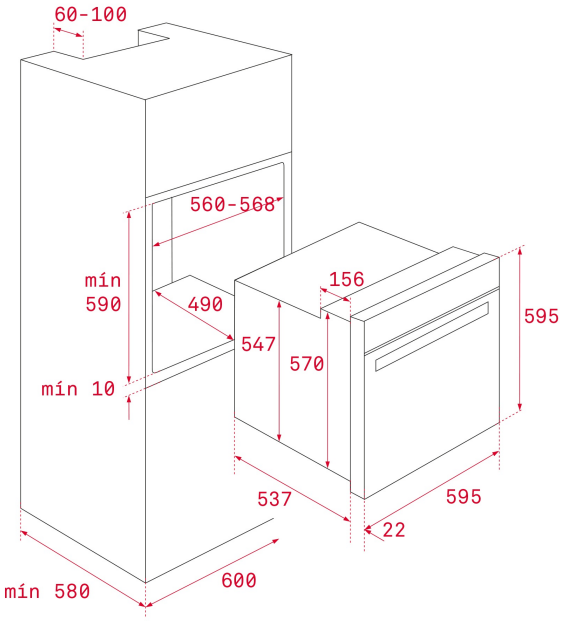

REFERENCE

REF: 111010017 EAN: 8434778008685

FEATURES

Country Style Edition
Multifunction SurroundTemp oven
9 cooking functions
Automatic HydroClean system
Mechanical control knobs
Electronic timer
Chrome supports with 5 cooking levels
Telescopic guides basic
Removable double glazed door
Manual quick preheating
Anti-tip deep tray
Capacity (gross/net): 71 / 70 litres

DIMENSIONS

Product height (mm): 595
Product width (mm): 595
Product depth (mm): 537+22
Product length (mm):
Net weight (Kg): 27

TECHNICAL DETAILS

Energy Efficiency Class: A+
Power rate (V): 220/240
Frequency (Hz): 50/60
Maximum Nominal Power (W): 3215

COLOURS

111010017	Vanilla silver
111010014	Anthracite silver
111010014	Vanilla brass
111010014	Anthracite brass