JZC 64322 AB
Urban Colors Edition. Gas on Glass and induction hob with direct functions and 4 cooking zones

MultiSlider | Auto ignition | Autolock | ExactFlame | Power

Power Plus | Easy installation

REFERENCE

REF: 112570113 EAN: 8434778011241

FEATURES

Urban Colors Edition
Gas on glass + Induction hob
ExactFlame
Direct functions: Simmering, melting and keep warm
Frontal control knobs + Touch Control MultiSlider
4 cooking zones
1 fast burner, 2.8 kW
1 auxiliary burner, 1 kW
1 zone Ø 210 mm
1 zone Ø 145 mm
Ceramic glass surface
Auto ignition
Auto-lock safety system
Cast iron grids
Indution:
Cooking timer
Power plus
Child lock
Residual heat indicator
Power management
Easy installation kit
Maximum nominal power(Gas) 3800 W
Maximum nominal power(Induction) 3500 W
Optional: Wok support
Silver knobs accessory available

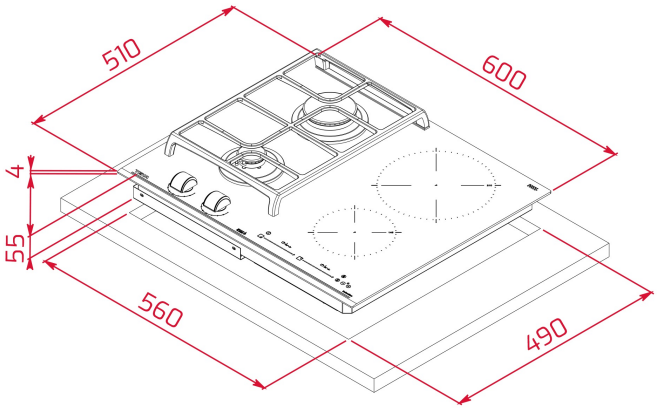

DIMENSIONS

Product height (mm): 98
Product width (mm): 600
Product depth (mm): 510
Product length (mm):
Net weight (Kg): 12,8

TECHNICAL DETAILS

Power rate (V): 220-240
Frequency (Hz): 50/60
Maximum Nominal Power (W): 3500

COLOURS

112570113 Black glass