MAESTRO **FOT 939**

Professional Kitchen Mixer with swivel and flexible spout

Saving Water | Anti-Scale Aerator | High Resistance | Pull Down Shower | Resistance

Swivel Spout | Easy_Quick

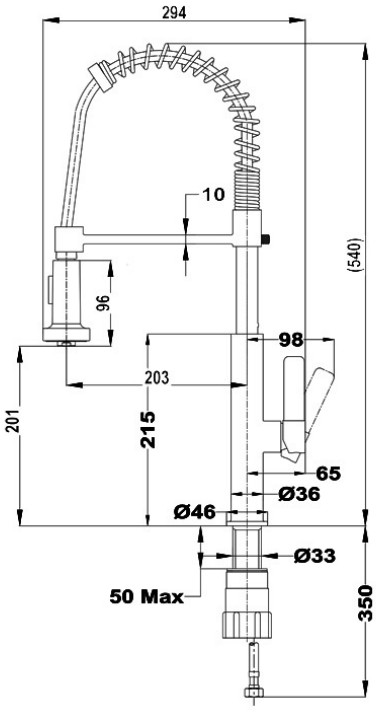

REFERENCE

REF: 116010002 EAN: 8434778002812

FEATURES

Professional kitchen tap
Swivel and flexible spout
Anti-scale aerator
Pull-down shower 2 functions: normal & shower spray
Cartridge with ceramic discs of high resistance
Highly precise temperature control
Greater handling sensitivity with smoother movements
High resistant flexible spring
Stainless steel flexible hose reinforced with plastic for better protection and easy cleaning
Easy-Quick fixation system
3/8" - 1/2" flexible inlet pipes

DIMENSIONS

Product height (mm): 540
Product width (mm):
Product depth (mm): 294
Product length (mm):
Net weight (Kg): 1,62

COLOURS

116010002 Chrome