ICC 915
Single lever kitchen tap with swivel spout

REFERENCE

REF: 116030004 EAN: 8434778002973

FEATURES

High spout kitchen tap
Swivel Spout
Anti-scale aerator
Cartridge with ceramic discs of high resistance
Highly precise temperature control
Greater handling sensitivity with smoother movements
Surface resistant to daily use
3/8" - 1/2" flexible inlet pipes

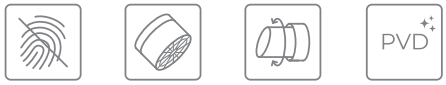

Fingerprint-Proof | Anti-scale aerator | Swivel spout | PVD

DIMENSIONS

Product height (mm): 313
Product width (mm):
Product depth (mm):
Product length (mm):
Net weight (Kg): 1,65

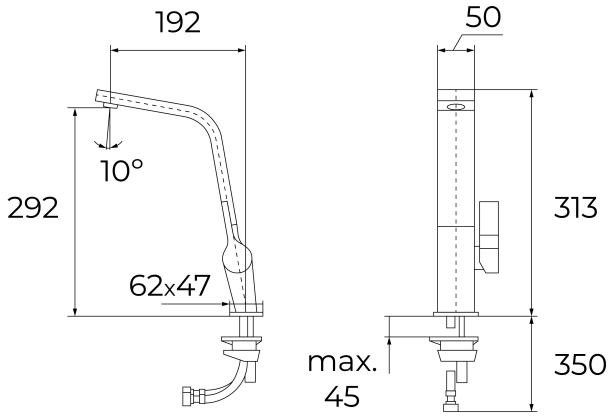

COLOURS

	116030004	Chrome
	116030006	Titanium
	116030006	Brass