Tekaway Deva 45 I-CN 1B 1D
Plug & Play: sink + tap + accessories

REFERENCE

REF: 12133015 EAN: 8421152156926

FEATURES

Plug & Play: Sink + Tap + Accessories
Stainless steel sink, Matt finish
Kitchen tap ML 913 included
One bowl and one drainer
Inset installation
3½" automatic basket waste with siphon
150 mm deep bowl
45 cm base unit

DIMENSIONS

Product height (mm):
Product width (mm): 435
Product depth (mm): 150
Product length (mm): 780
Net weight (Kg): 2

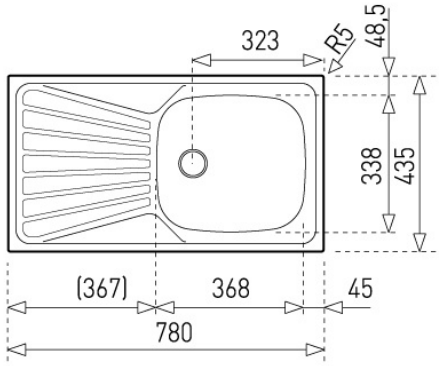

COLOURS

12133015 Matt chrome

12133007 Matt chrome