RLF 74910 EU SS Full No Frost Side By Side Refrigerator 179cm with 2 doors and Eco function

On Holidays function | Fresh Box | LED | LongLife No Frost

DESCRIPTION	Full No Frost Side By Side Refrigerator 179cm with 2 doors and Eco function
LIFE STYLE	Maestro
COLOURS	
REFERENCE	REF. 113430012 EAN. 8434778003918

RLF 74910 EU SS

FEATURES

Free Standing side by side refrigerator
Full No Frost
Outer control display
Electronic adjustable thermostat
2 FreshBox drawers
Safety glass shelves
On holidays function
Fast freezing and fast cooling function
Front adjustable feet
LED Illumination
Climate class: SN/N/ST
Total capacity (gross/net): 587 / 510 litres
2 Ice cube tray and twister ice maker included

RLF 74910 EU SS

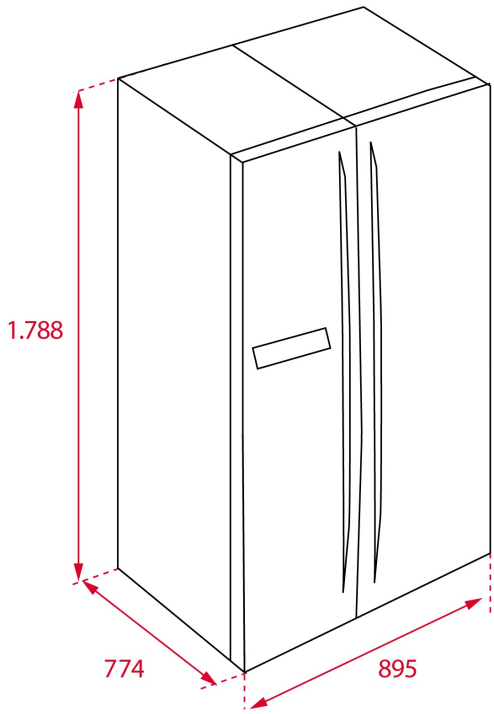

DIMENSIONS

Product height (mm): 1765
Product width (mm): 897
Product depth (mm): 761
Product length (mm):
Net weight (Kg): 99

TECHNICAL DETAILS

PRODUCT SHEET

Cooling system: LongLife No Frost
No Frost In Refrigerator Compartment: Yes
No Frost in freezer compartment: Yes
Total gross capacity (litres): 587
Refrigerator compartment capacity (litres): 335
Freezer compartment capacity (litres): 197
Freezer classification: 4
Freezing capacity: 9
Annual Consumption (kWh/year): 401
Temperature Rise Time (h): 10
Climate class: SN/N/ST
Noise level (dB): 41
Certificates: CE, TUV, GS

POWER SUPPLY

Frequency (Hz): 50
Power rate (V): 220-240
Power rate (W): 130
Defrost element power (W): 240
Energy consumption (kw/day): 1,11
Plug type: EU

Cable Connection Length (cm): 1750

FEATURES

Type of installation: Free standing
Automatic defrosting in the refrigeration compartment: Yes
Automatic defrosting in the freezer compartment: Yes
Electronic adjustable thermostat: Yes
Display on door: Yes
Fingerprint proof door: Yes
Antibacterial treatment: NO
Freezing set button: Yes
Cooling set button: Yes
Lock function: Yes
Fast freezing: Yes
Fast Cooling Function: Yes
On Holidays Function: Yes
Inner light: Yes
Type of inner light: LED
External handle: Yes

CONTROL INDICATOR LIGHTS

Operating light fridge: Yes
Operating light freezer: Yes
Freezer compartment temperature display: Yes
Fast freezing indicator: Yes
Acoustic alarm: Yes

EQUIPMENT

Multipurpose compartment: NO
Twister ice maker: Yes
Ice cubes tray: 2
Bottle rack type: NO
Adjustable Feet Back: Yes
Adjustable feet front: Yes
Refrigerator adjustable shelves: Yes
Vegetable drawers: 2

RLF 74910 EU SS
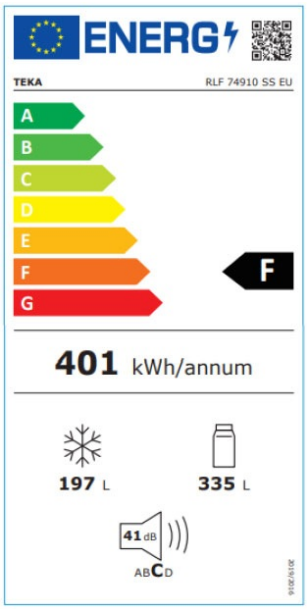
ENERGY LABEL