IZF 88700 MST BK 80cm DirectSense with FullFlex Induction with temperature sensors and RiceCooker function

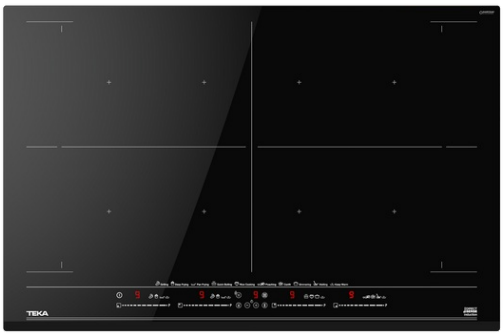

MultiSlider | Autolock | Power | Power Plus | Easy installation | Flex

DESCRIPTION	80cm DirectSense with FullFlex Induction with temperature sensors and RiceCooker function
LIFE STYLE	Maestro
COLOURS	
REFERENCE	REF. 112500029 EAN. 8434778011845

IZF 88700 MST BK

FEATURES

Urban Colors Edition
MasterSense Series
FullFlex Induction hob
SlideCooking Function
Direct functions with temperature sensors: Rice cooking, keep warm, confit, poaching, grilling,keep warm, pan frying, deep frying, quick boiling, simmering and melting.
Touch Control MultiSlider
4 cooking zones
4 zones Ø 296,5 X 197,5 mm
Ceramic glass surface
Auto-lock safety system
Cooking timer
Power plus child lock
Residual heat indicator
Power management
Easy installation kit
Maximum nominal power 7400 W

IZF 88700 MST BK

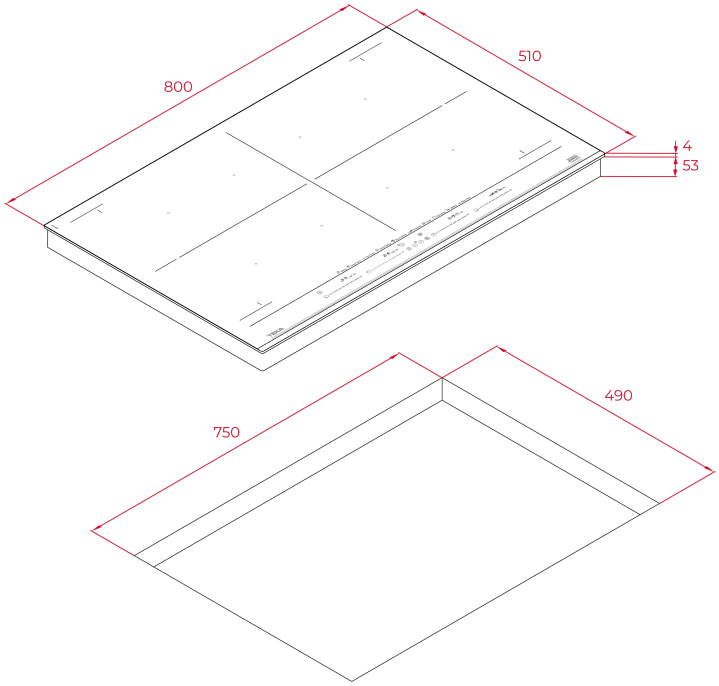

DIMENSIONS

Product height (mm): 57
Product width (mm): 800
Product depth (mm): 510
Product length (mm):
Net weight (Kg): 15

TECHNICAL DETAILS

FITTING MEASURES	**Built-in Width (mm):** 750 **Built-in Depth (mm):** 490 **Built-in height (mm):** 53
FEATURES	**Number of electric power levels:** 9 **Grilling:** Yes **Pan frying:** Yes **Deep frying:** Yes **Simmering:** Yes **Melting:** Yes **Keeping warm:** Yes **Confit:** Yes **Poach:** Yes **Rice Cook:** Yes **Low-temp Function:** Yes **Power management function:** Yes
ELECTRIC CONNECTION	**Maximum Nominal Power (W):** 7400 **Frequency (Hz):** 50/60

Power rate (V): 220-240
Cable Connection Length (cm): 110
Maximum Nominal Power (W) (Electric hob): 7400

COOKING ZONES

Cooking Zones: 4

SAFETY SYSTEMS

Residual heat indicator (Electric hob): Yes
Automatic safety disconnection (Auto Lock) (Electric hob): Yes
Child lock: Yes

FINISH

Surface finishing: Front bevelled glass
Surface type: Ceramic Glass (4mm)
Easy installation system: Yes

ACCESSORIES

Junction Kit: Optional
Teppan Yaki: Optional