**TKD 1510 WD EU EXP** Free standing Washer Dryer with 22 programs, 10kg washing capacity and 7kg drying capacity

Quick Cycle

Washing capacity: 10Kg

Washing capacity: 7Kg

| | |
|---|---|
| **DESCRIPTION** | Free standing Washer Dryer with 22 programs, 10kg washing capacity and 7kg drying capacity |
| **LIFE STYLE** | Maestro |
| **COLOURS** | |
| **REFERENCE** | REF. 113960008<br>EAN. 8434778018547 |

# TKD 1510 WD EU EXP

**FEATURES**

Free standing Washer-Dryer
Electronic control panel with display
Washing capacity: 10 kg
Drying capacity: 7 kg
Washing programs: 16
Drying programs: 6
Fast program: 15 minutes
Special programs: ECO mode, Wool care, Delicate, Easy iron, Quick Wash & Dry
Special functions: Delay timer, Speed wash, Easy ironing, Extra rinse
Condenser heat pump
Maximum spinning speed: 1500 RPM
Automatic water regulation
Automatic door lock safety system
Child lock
SoftCare drum
Delay timer: 1-24 hours
33 cm wide porthole door

# TKD 1510 WD EU EXP

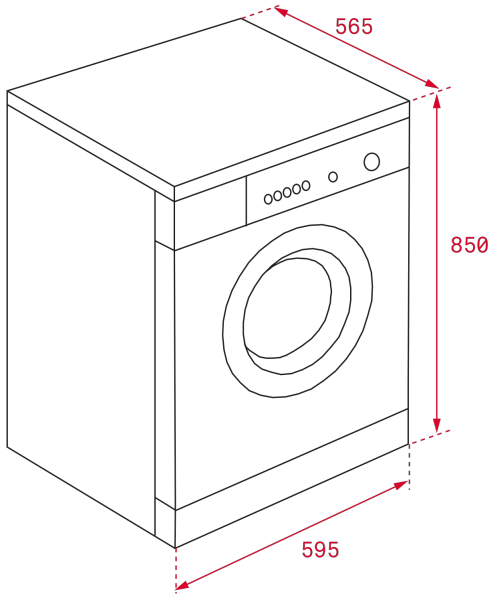


## DIMENSIONS

**Product height (mm):** 850
**Product width (mm):** 595
**Product depth (mm):** 565
**Product length (mm):**
**Net weight (Kg):** 71

## TECHNICAL DETAILS

### PRODUCT SHEET

**Type of installation:** Free standing
**Drying capacity (Kgs):** 7
**Energy consumption (kWh/year):** 220
**Water consumption (litres/year):** 14000
**Certificates:** CE

### POWER SUPPLY

**Frequency (Hz):** 50
**Power rate (V):** 220-240
**Plug type:** EU
**Cable Connection Length (cm):** 1,5
**Maximum Nominal Power (W):** 1950
**Water outlet hose length (m):** 1.6
**Water inlet hose length (m):** 1

### FEATURES

**Stainless Steel Drum:** Yes
**Glass door diameter (cms):** 48
**Double water inlet (warm-cold):** Yes
**Number of programs:** 16
**Number Of Washing Temperatures:** 0-20-30-40-60-90

**Control panel:** ELECTRONIC LED WHITE DISPLAY
**Child lock:** Yes
**Auto lock door:** Yes
**Cancel spin cycle button:** Yes

## CONTROL INDICATOR LIGHTS

**Selected program indicator:** Yes
**Remaining time:** Yes
**Drying:** Yes
**Dryer timer:** Yes

## SPECIAL FUNCTIONS

**Fast program:** Yes
**Fast program (minutes):** 15
**Economic program:** Yes
**Intense program:** Yes
**Delayed Timer (h):** 1-24
**Delicate fabrics:** Yes
**Easy ironing/anti crease:** Yes

## EQUIPMENT

**Adjustable Feet Back:** Yes
**Adjustable feet front:** Yes