IZC 32310 MSP 31 cm modular induction hob with Touch Control MultiSlider and 2 cooking zones

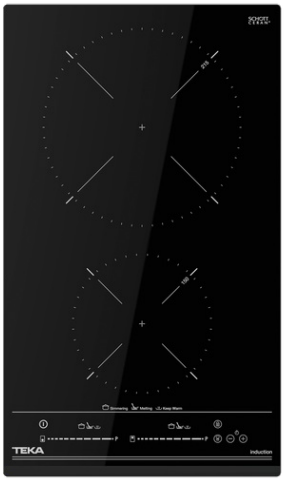

MultiSlider | Autolock | Power | Power Plus | Easy installation

DESCRIPTION	31 cm modular induction hob with Touch Control MultiSlider and 2 cooking zones
LIFE STYLE	Total
COLOURS	
REFERENCE	REF. 112520014 EAN. 8434778012064

IZC 32310 MSP

FEATURES

Urban Colors Edition
Modular induction hob
Direct functions: Simmering, melting and keep warm
Touch Control MultiSlider
2 cooking zones
1 zone Ø 215 mm
1 zone Ø 150 mm
Ceramic glass surface
Auto-lock safety system
Cooking timer
Power plus
Child lock
Residual heat indicator
Power management
Easy installation kit
Maximum nominal power 3600 W
Optional: Grilling plate
Optional: Teppanyaki

IZC 32310 MSP

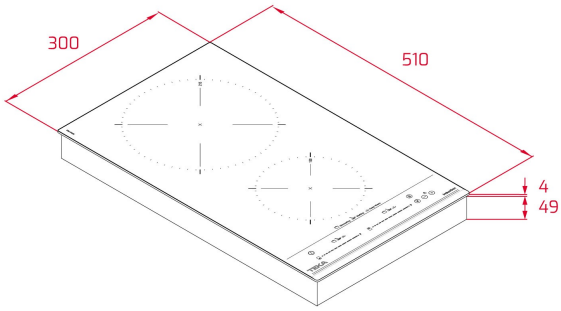

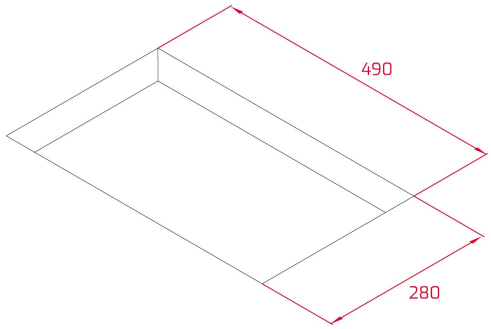

DIMENSIONS

Product height (mm): 53
Product width (mm): 300
Product depth (mm): 510
Product length (mm):
Net weight (Kg): 4,78

TECHNICAL DETAILS

FITTING MEASURES	**Built-in Width (mm):** 280 **Built-in Depth (mm):** 490 **Built-in height (mm):** 49
FEATURES	**Number of electric power levels:** 9 **Simmering:** Yes **Melting:** Yes **Keeping warm:** Yes **Power management function:** Yes
ELECTRIC CONNECTION	**Frequency (Hz):** 50/60 **Power rate (V):** 220-240 **Cable Connection Length (cm):** 110 **Maximum Nominal Power (W) (Electric hob):** 3600
COOKING ZONES	**Cooking Zones:** 2

SAFETY SYSTEMS	**Residual heat indicator (Electric hob):** Yes **Automatic safety disconnection (Auto Lock) (Electric hob):** Yes **Child lock:** Yes
FINISH	**Surface finishing:** Front bevelled glass **Surface type:** Ceramic Glass (4mm) **Easy installation system:** Yes
ACCESSORIES	**Junction Kit:** Optional **Teppan Yaki:** Optional