GZC 32300 XB Gas on Glass Hob in 30cm with ExactFlame function

Auto ignition | Autolock | ExactFlame | Easy installation

DESCRIPTION	Gas on Glass Hob in 30cm with ExactFlame function
LIFE STYLE	Total
COLOURS	
REFERENCE	REF. 112570196 EAN. 8434778019452

GZC 32300 XB

FEATURES

Urban Colors Edition
Modular gas on glass hob
ExactFlame
Frontal control knobs with ergonomic design
2 cooking zones
1 fast ring burner, 2.8 kW
1 auxiliary burner, 1 kW
Ceramic glass surface
Auto ignition
Auto-lock safety system
Cast iron grids
Easy installation kit
Maximum nominal power 3800 W

GZC 32300 XB

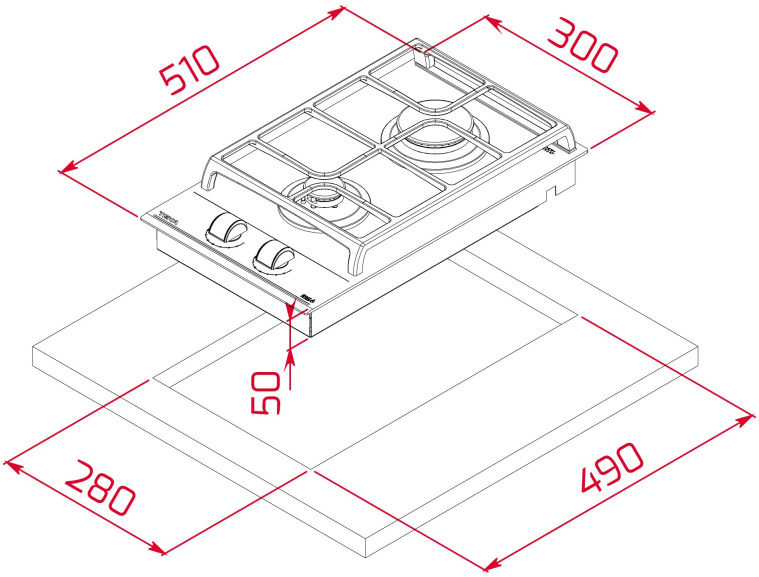

DIMENSIONS

Product height (mm): 98
Product width (mm): 300
Product depth (mm): 510
Product length (mm):
Net weight (Kg): 6,25

TECHNICAL DETAILS

FITTING MEASURES	**Built-in Width (mm):** 280 **Built-in Depth (mm):** 490 **Built-in height (mm):** 49
FEATURES	**Gas type:** Natural&Butane **Maximum nominal power (W) (Gas):** 3800 **Autoignition:** Yes
ELECTRIC CONNECTION	**Frequency (Hz):** 50/60 **Power rate (V):** 220-240 **Cable Connection Length (cm):** 100
COOKING ZONES	**Cooking Zones:** 2
SAFETY SYSTEMS	**Automatic safety disconnection (Auto Lock) (Gas):** Yes

FINISH	**Surface finishing:** Front bevelled glass **Surface type:** Ceramic Glass (4mm) **Easy installation system:** Yes
ACCESSORIES	**Grid type:** Full Grid **Wok support:** NO **Junction Kit:** Optional **Cast Iron Grids:** Yes **Teppan Yaki:** NO