ML 8200 BIS Built-in microwave + grill with touch control

Defrost By Time

Defrost By Weight

Direct Access Menu

DESCRIPTION	Built-in microwave + grill with touch control
LIFE STYLE	Maestro
COLOURS	
REFERENCE	REF. 112060001 EAN. 8434778016123

ML 8200 BIS

FEATURES

Urban Colors Edition
Built-in Microwave + Grill
3 cooking functions
3 direct access menus
1 memory
5 power levels, 1200 W
Grill power: 1000 W
Defrost by time and weight
Touch control display with knobs
Double glazed door with left opening
Automatic disconnection when open door
Quick start
Capacity (gross/net): 20 / 18 litres
Stainless steel cavity

ML 8200 BIS

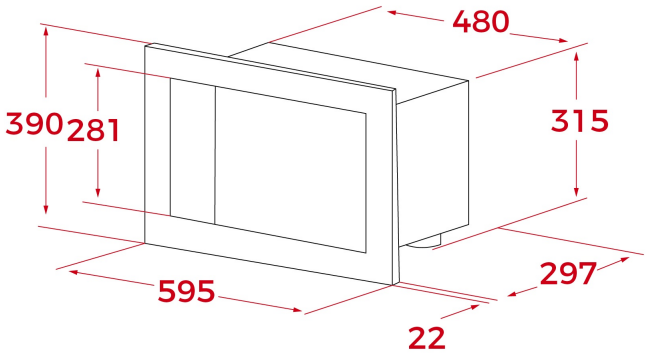

DIMENSIONS

Product height (mm): 390
Product width (mm): 595
Product depth (mm): 325
Product length (mm):
Net weight (Kg): 17,5

TECHNICAL DETAILS

FEATURES	**Certificates:** CE/CB **Number of cooking functions:** 3 **Number of memories:** 1 **Grill function:** Yes **Microwave function:** Yes **Microwave + Grill function:** Yes **Number of power levels:** 5 **Minute Quick Start:** Yes **Seconds Quick Start:** Yes
ELECTRIC CONNECTION	**Maximum Nominal Power (W):** 1200 **Frequency (Hz):** 50 **Power rate (V):** 220 - 240 **Cable Connection Length (cm):** 110 **Plug:** Yes
ENERGY CONSUMPTION	**Grill (W):** 1000

SAFETY SYSTEMS	**Automatic disconnection when opening the door:** Yes **Panel blocking system:** Yes **Safety Thermostat:** Yes