MAESTRO **iOven P**

A+ Pyrolytic Oven with 50 recipes and SteamBox

70L | DualClean | Full Extension Telescopic Guide | MeatProbe | HydroClean

Pyrolysis | SoftClose | SurroundTemp | The SteamBox Included

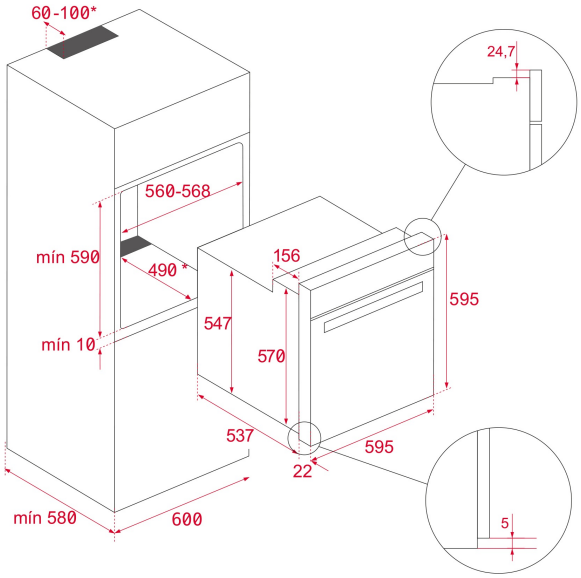

REFERENCE

REF: 111000000 EAN: 8434778000146

FEATURES

Multifunction SurroundTemp oven
18 cooking functions
Pyrolysis self-cleaning system and automatic HydroClean system
Full touch control display
Personal cooking assistant: 50 automatic programs
Chrome supports with 5 cooking levels
Full extension telescopic guides
Easy slide telescopic guides
Removable quadruple glazed door
SoftClose system
Children safety lock
Automatic disconnection safety system
Automatic quick preheating
Anti-tip deep tray
The SteamBox included
Capacity (gross/net): 71 / 70 litres

DIMENSIONS

Product height (mm): 595
Product width (mm): 595
Product depth (mm): 537+22
Product length (mm):
Net weight (Kg): 40

TECHNICAL DETAILS

Energy Efficiency Class: A+
Power rate (V): 220-240
Frequency (Hz): 50/60
Maximum Nominal Power (W): 3552

COLOURS

111000000 Black Glass with StainlessSteel frame