TOTAL **HLC 847 S**

Compact Multifunction Oven in 45cm with steamer

48L SoftClose

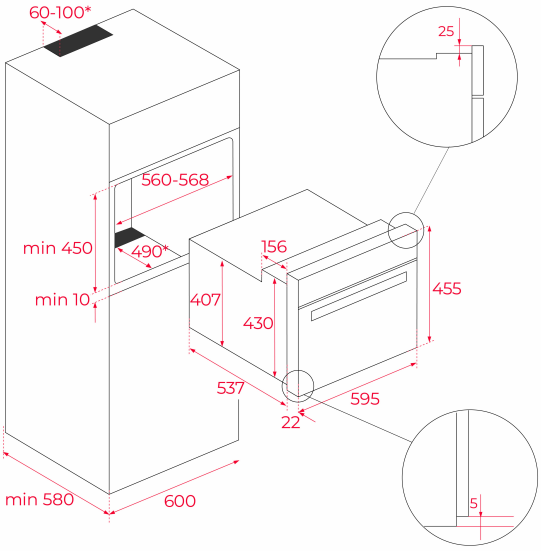

REFERENCE

REF: 111230000 EAN: 8434778003352

FEATURES

Multifunction SurroundTemp oven + Steamer
Temperature range 30-100 ºC
1 litre water tank
Touch control display with knobs
Electronic timer (Delay/Start function)
Sterilization and regeneration function
Chrome supports with 5 cooking levels
Removable triple glazed door
SoftClose system
Automatic disconnection security system
Children safety lock
Anti-tip deep tray,anti-tip gastronorm tray and reinforced grid
Capacity (gross/net): 48 / 49 litres

DIMENSIONS

Product height (mm): 455
Product width (mm): 595
Product depth (mm): 559
Product length (mm):
Net weight (Kg): 26,5

TECHNICAL DETAILS

Energy Efficiency Class: -
Power rate (V): 220-240
Frequency (Hz): 50/60
Maximum Nominal Power (W): 3000

COLOURS

111230000 Black Glass with StainlessSteel frame