MAESTRO **CP 15 GS**

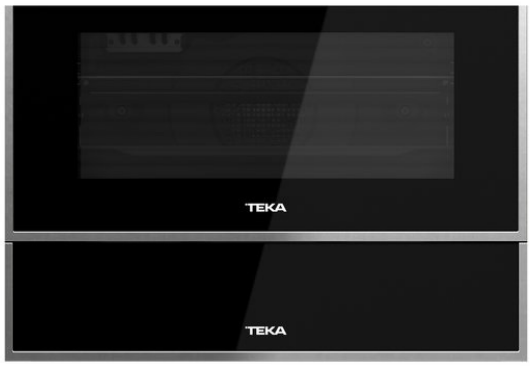

REFERENCE

REF: 40589920 EAN: 8421152145623

FEATURES

Plate warmer
Temperature range: 30º-80º
6 plates setting
Push-pull opening system
Anti-sliding base
Cold front door
Safety thermostat

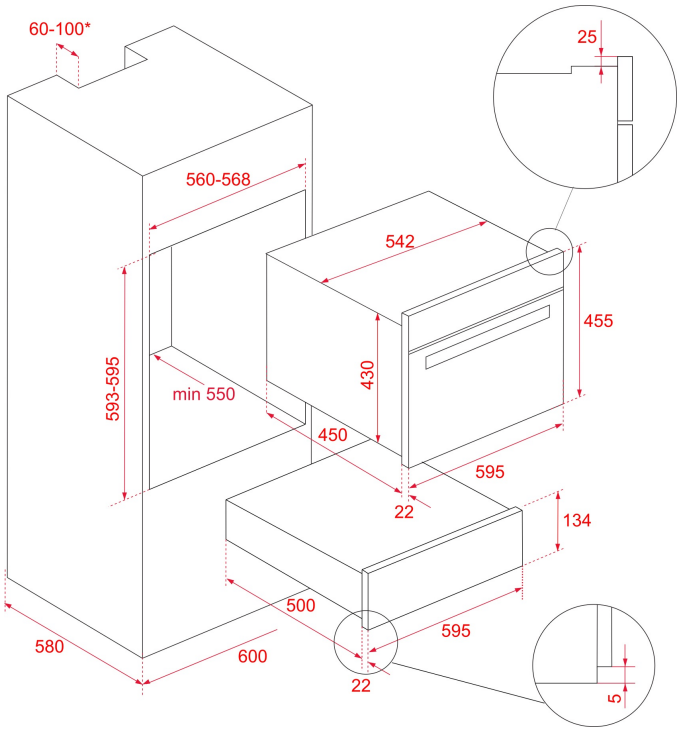

DIMENSIONS

Product height (mm): 140
Product width (mm): 595
Product depth (mm): 557
Product length (mm):
Net weight (Kg): 18

TECHNICAL DETAILS

Energy Efficiency Class: -
Power rate (V): -
Frequency (Hz): 50-60
Maximum Nominal Power (W): 420

COLOURS

40589920 Black Glass with StainlessSteel frame

40589921 White Glass