NEO HSB 6466 FBK

Multifunction oven with AirFry function, 9 cooking functions and HydroClean system

70L | HydroClean steam cleaning system | SurroundTemp

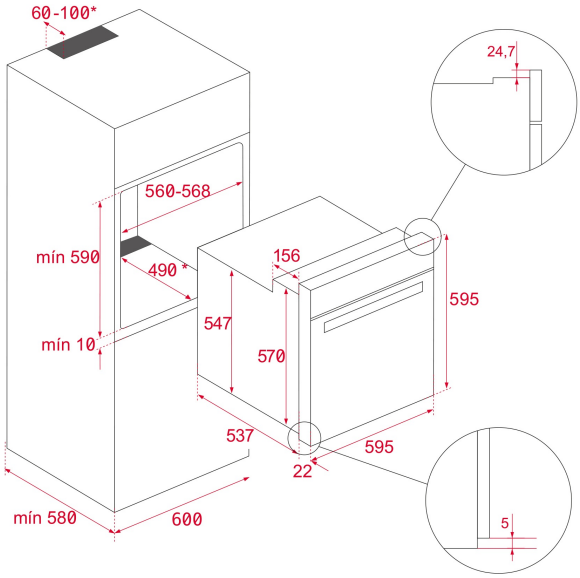

REFERENCE

REF: 111010101 EAN: 8434778035513

FEATURES

Neo Series
Multifunction oven
AirFry function for crunchy results
Chef functions for automatic programmes
ThermoSeal System for a stable temperature inside
Ultra-resistant BrightClean enamel
FastClick System for tray supports
Ergonomic and stylish handle
Wider LED display window
9 cooking functions
Automatic HydroClean system
Mechanical control with push-pull knobs
Electronic LED timer with touch control (Delay/Start function)
Chrome supports with 5 cooking levels
Plus Extension Telescopic guides
Removable double glazed door
Automatic disconnection security system
Manual quick preheating
Door square pattern
Flat Stainless-Steel panel
Anti-tip deep tray
Fingerprint proof stainless steel
Special FryMaster Box to cook without oil
Baking tray
Capacity (gross/net): 71 / 70 litres

DIMENSIONS

Product height (mm): 595
Product width (mm): 595
Product depth (mm): 537+22
Product length (mm):
Net weight (Kg): 28

TECHNICAL DETAILS

Energy Efficiency Class: A+
Power rate (V): 220/240
Frequency (Hz): 50/60
Maximum Nominal Power (W): 3215

COLOURS

111010101 Full Black