HLC 847 SC Compact Multifunction Oven in 45cm with HydroClean system and steamer

44L | MeatProbe | HydroClean | SoftClose | SurroundTemp

DESCRIPTION	Compact Multifunction Oven in 45cm with HydroClean system and steamer
LIFE STYLE	Maestro
COLOURS	
REFERENCE	REF. 40589020 EAN. 8421152145418

HLC 847 SC

FEATURES

Multifunction SurroundTemp oven + Steamer
15 cooking functions
Temperature range 30-100 ºC
1 litre water tank
Automatic HydroClean system
Touch control display with knobs
Electronic timer (Delay/Start function)
Personal cooking assistant: 20 automatic programs
Slow cook, sterilization and regeneration function
Chrome supports with 5 cooking levels
Removable quadruple glazed door
SoftClose system
Automatic disconnection security system
Children safety lock
Automatic quick preheating
Anti-tip deep tray, anti-tip gastronorm tray and reinforced grid
MeatProbe included
Capacity (gross/net): 45 / 44 litres

HLC 847 SC

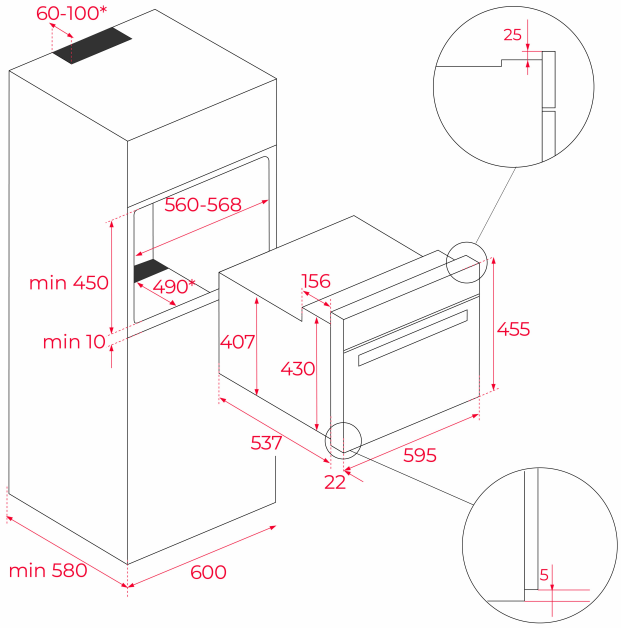

DIMENSIONS

Product height (mm): 455
Product width (mm): 595
Product depth (mm): 559
Product length (mm):
Net weight (Kg): 28

TECHNICAL DETAILS

FEATURES

Certificates: CE/CB
Number of cavities: 1
Type of inner light: Halogen
Inside light position: upper rear right
Enamelled cavity: Yes
Min. Temperature Regulator (ºC): 50
Max. Temperature Regulator (ºC): 250
Function selector: ELECTRONIC
Number of cooking functions: 15
Number of recipes: 20
Top + Bottom function: Yes
Grill + Bottom function: Yes
Grill function: Yes
MaxiGrill function: Yes
Top + Bottom + Fan function: Yes
Bottom function: Yes
Bottom + TURBO (Pizza) function: Yes
Turbo function: Yes
ECO function: Yes
Automatic quick heating: Yes
Slow Cook: Yes
Knobs type: MMX FIX KNOB

Ring illuminated: Yes
Removable chromed tray guides: Yes
Number of guide levels: 4
Number of guide levels (lower cavity): 0
Forced refrigeration tangential 1 speed: Yes
SoftClose: Yes

ELECTRIC CONNECTION

Maximum Nominal Power (W): 3000
Frequency (Hz): 50/60
Power rate (V): 220-240
Cable Connection Length (cm): 110
Inside light Consumption (W): 25

ENERGY CONSUMPTION

Energy consumption per cycle in conventional mode (kWh): 0.67
Energy consumption per cycle in fan-forced convection mode (kWh): 0,59
Bottom Heating Element (W): 1150
Grill (W): 1400
Maxi Grill (W): 2500
Traditional (W): 2250
Turbo (W): 1800
Multifunction Turbo (W): 22
Cooling Fan Motor (W): 35

SAFETY SYSTEMS

Automatic disconnection when opening the door: Yes
Panel blocking system: Yes
Children safety block option: Yes
Grill protection: Yes
Anti-tip tray system: Yes
Safety Thermostat: Yes

CLEANING SYSTEM

Fingerprint proof stainless steel: Yes
Crystal Clean Enamel (Slippery): Yes
Hydroclean PRO: Yes

ACCESSORIES

Deep Tray (50 mm): 1
Reinforced grid: 1
Meat Probe: 1

ENERGY EFFICIENCY

Energy Efficiency Class: A+
Energy Efficiency Index (EEI): 80,8

HLC 847 SC
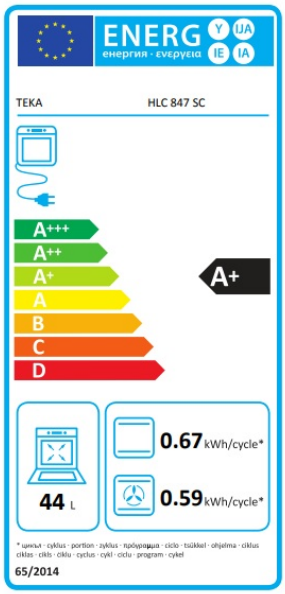
ENERGY LABEL