# **HSB 620P** 60cm A+ Multifunction Pyrolytic Oven

70L | DualClean | HydroClean | Pyrolysis

| | |
|---|---|
| **DESCRIPTION** | 60cm A+ Multifunction Pyrolytic Oven |
| **LIFE STYLE** | Total |
| **COLOURS** | |
| **REFERENCE** | REF. 41566033<br>EAN. 8421152157725 |

# HSB 620P

**FEATURES**

Multifunction oven
8 cooking functions
Pyrolysis self-cleaning system and automatic HydroClean system
Mechanical control knobs
Electronic timer
Chrome supports with 5 cooking levels
Removable triple glazed door
Children safety lock
Automatic disconnection safety system
Manual quick preheating
Anti-tip deep tray
Capacity (gross/net): 71 / 70 litres

# HSB 620P

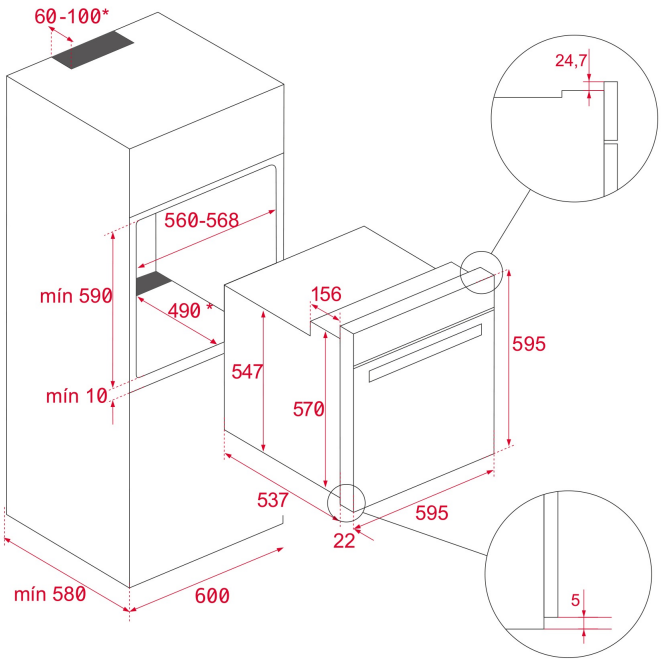


## DIMENSIONS

**Product height (mm):** 595
**Product width (mm):** 595
**Product depth (mm):** 537+22
**Product length (mm):**
**Net weight (Kg):** 31

## TECHNICAL DETAILS

### FEATURES

**Certificates:** N / CE / CCA / CB
**Number of cavities:** 1
**Type of inner light:** Halogen
**Inside light position:** RIGHT TOP CORNER
**Enamelled cavity:** Yes
**Min. Temperature Regulator (ºC):** 50
**Max. Temperature Regulator (ºC):** 250
**Function selector:** 11+0
**Number of cooking functions:** 8
**Top + Bottom function:** Yes
**Grill function:** Yes
**MaxiGrill function:** Yes
**Top + Bottom + Fan function:** Yes
**MaxiGrill + Fan function:** Yes
**Bottom function:** Yes
**ECO function:** Yes
**Mechanical quick heating:** Yes
**Touch Control Programmer:** Yes
**Knobs type:** MMX FIX knurling
**Removable chromed tray guides:** Yes
**Number of guide levels:** 5

| | |
|---|---|
| **ELECTRIC CONNECTION** | **Maximum Nominal Power (W):** 3552<br>**Frequency (Hz):** 50/60<br>**Power rate (V):** 220-240<br>**Cable Connection Length (cm):** 110<br>**Inside light Consumption (W):** 25 |
| **ENERGY CONSUMPTION** | **Energy consumption per cycle in conventional mode (kWh):** 0.88<br>**Energy consumption per cycle in fan-forced convection mode (kWh):** 0,68<br>**Bottom Heating Element (W):** 1050<br>**Grill (W):** 1400<br>**Maxi Grill (W):** 2450<br>**Traditional (W):** 2450<br>**Multifunction Turbo (W):** 25<br>**Cooling Fan Motor (W):** 30 |
| **SAFETY SYSTEMS** | **Automatic disconnection when opening the door:** Yes<br>**Panel blocking system:** Yes<br>**Children safety block option:** Yes<br>**Grill protection:** Yes<br>**Anti-tip tray system:** Yes<br>**Safety Thermostat:** Yes |
| **CLEANING SYSTEM** | **Crystal Clean Enamel (Slippery):** Yes<br>**Hydroclean PRO:** Yes<br>**Pyrolytic:** Yes<br>**DualClean:** Yes |
| **ACCESSORIES** | **Deep Tray (50 mm):** 1<br>**Standard grid:** 1 |
| **ENERGY EFFICIENCY** | **Energy Efficiency Class:** A+<br>**Energy Efficiency Index (EEI):** 81 |

# HSB 620P
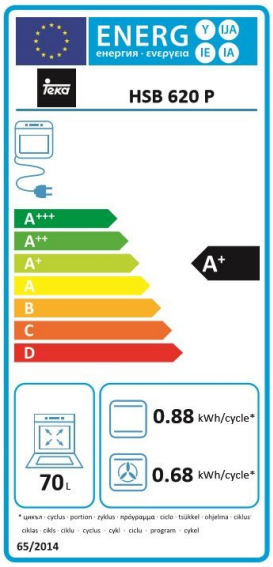
## ENERGY LABEL