CNL 9415 PLUS Pull-out hood with electronic control

LED

Stop Delay Timer

DESCRIPTION	Pull-out hood with electronic control
LIFE STYLE	Maestro
COLOURS	
REFERENCE	REF. 113070004 EAN. 8434778020809

CNL 9415 PLUS

FEATURES

Pull-out hood
Electronic control
5 speeds + 1 intensive
Free Outlet exhaust capacity (m3/h): 393
Intensive speed exhaust capacity (m3/h):385
Max speed exhaust capacity (m3/h):293
Min speed exhaust capacity (m3/h): 141
Intensive speed sound level (dBA): 69
Max speed sound level (dBA): 64
Min speed sound level (dBA): 52
4 LEDS lamps
2 Stainless Steel filters
Stop delay timer
Operating pilot light
Exchangeable front panel
Anti-return valve included
Optional Charcoal Filter: CNL 1C

CNL 9415 PLUS

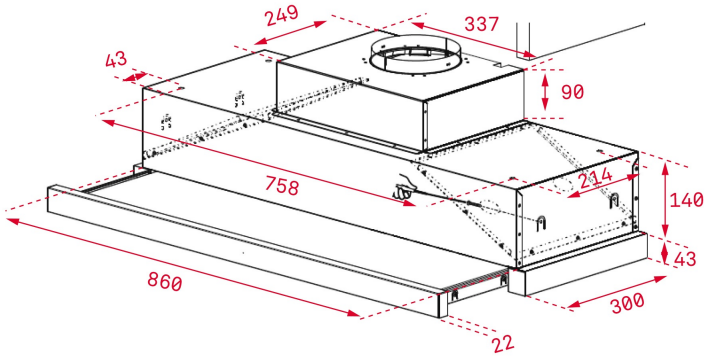

DIMENSIONS

Product height (mm): 184
Product width (mm): 900
Product depth (mm): 300/490
Product length (mm):
Net weight (Kg): 9,40

TECHNICAL DETAILS

FEATURES

Certificates: CE; CB; Rohs
Ø Outlet (mm): 120
Type of inner light: LED
Inside light Consumption (W): 9
Plug type: European plug
Power rate (V): 230
Frequency (Hz): 50
Total hood power (W): 119
Number of motors: 1
Motor power (W): 110
Air flow (Qmin) m3/h: 141
Air flow (Qmax): 293
Air flow (Qboost): 385

ACCESSORIES

Anti Return valve: Yes
Outlet extension: No
Optional Charcoal Filter: CNL 1C

MODELS

Number of filters: 2

Filter description: Stainless Steel filters MMX
Control panel: Electronic soft bottons
Stop delay timer: Yes
Automatic lighting: Yes
Number of speeds: 5+1